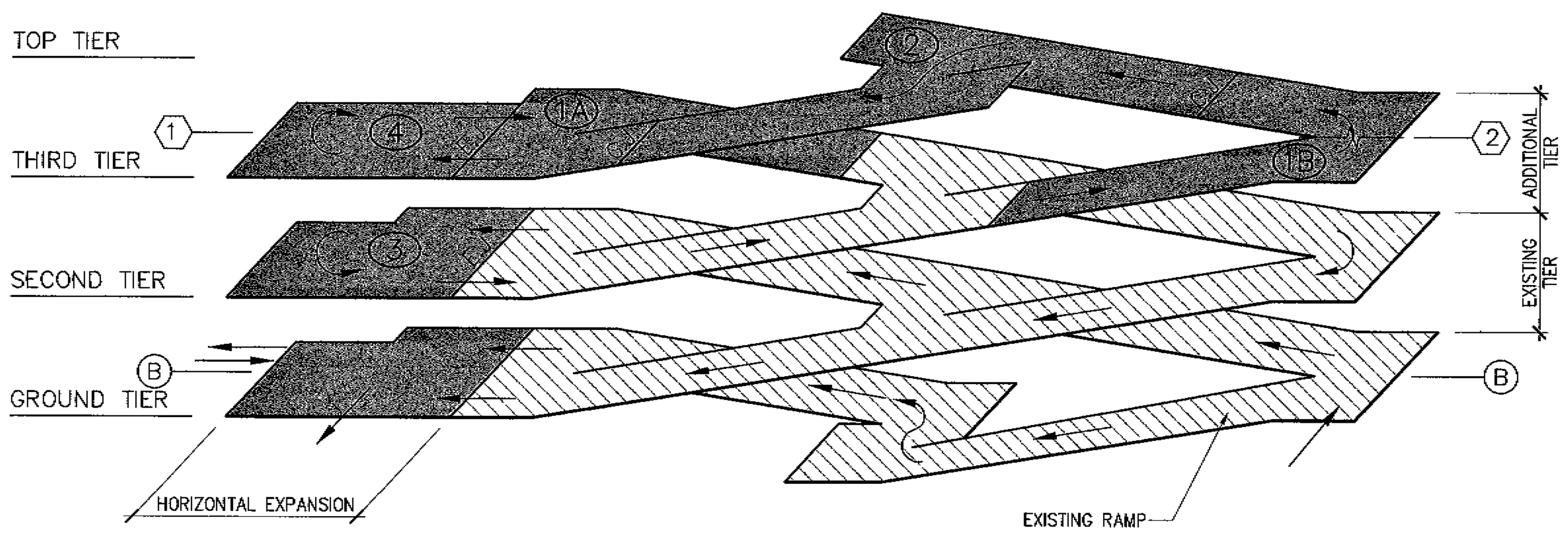

SUGGESTED POUR SEQUENCE

LEGEND

- ◯ COLUMN GRID
- ⬡ MATCH LINE
- ⬭ SUGGESTED POUR SEQUENCE

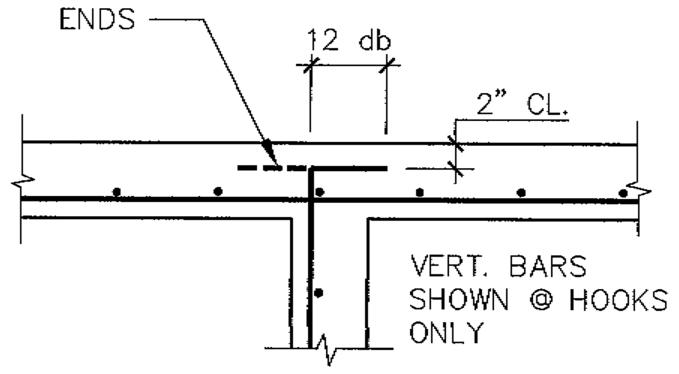

db = DIA OF BAR

CORNER REINF. (1/S0.1)

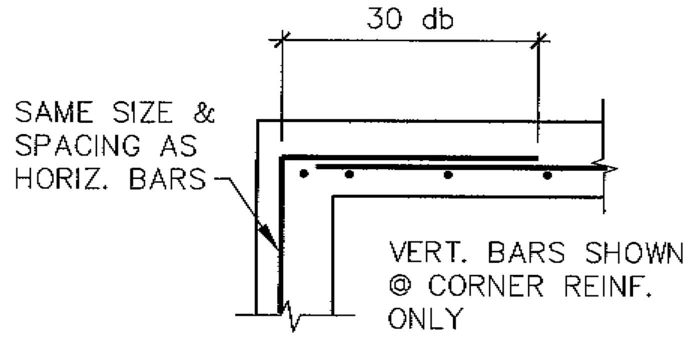

db = DIA OF BAR

CORNER REINF. (2/S0.1)

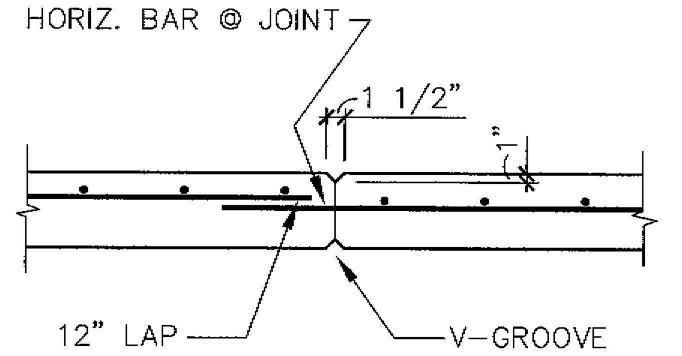

VERT. CONSTRUCTION JOINT (3/S0.1)

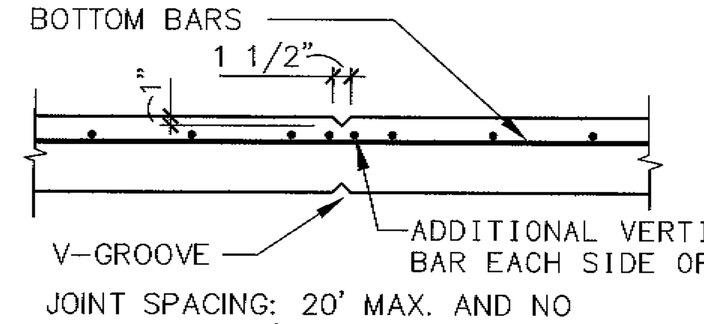

JOINT SPACING: 20' MAX. AND NO MORE THAN 10' FROM CORNER.

VERT. CONTROL JOINT (4/S0.1)

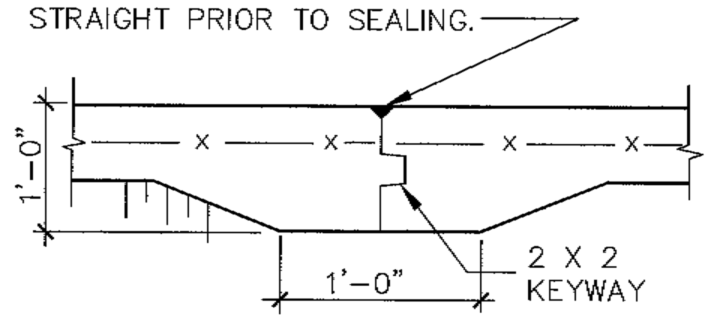

SLAB CONSTRUCTION JOINT (4/S0.1)

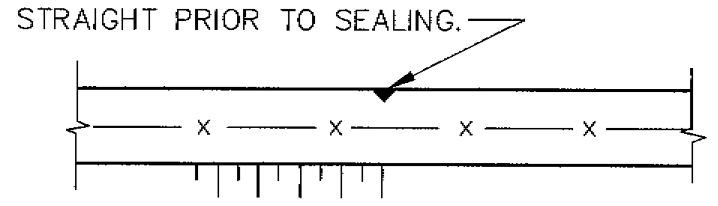

SLAB CONTROL JOINT (5/S0.1)

Copyright 2000. All rights reserved. No part of this document may be reproduced in any form or by any means without permission from Walker Parking Consultants/Engineers, Inc.

G:\21-2874.00-Edina 49.5\DRAWINGS\STRUCTURAL\2874-S01.dwg FEB 25, 2000 3:23 p.m. user: dahlinj

GENERAL NOTES

I. GENERAL

A. CONSTRUCTION

1. CONSTRUCTION SHALL BE IN ACCORDANCE WITH ALL APPLICABLE FEDERAL, STATE OF MINNESOTA AND CITY OF ST. PAUL CODES AND ORDINANCES, INCLUDING FIRE CODES.

B. DESIGN LIVE LOADS:

DESCRIPTION	ROOF (INCLUDING SNOW)	LOAD / FLOORS
1. ROOF, STAIR/ELEVATOR TOWERS		40 PSF
2. SUPPORTED PARKING AND DRIVE AREAS		
A. SLABS (UNREDUCED)	70 PSF	50 PSF
B. BEAMS (REDUCED)	70 PSF	30 PSF
C. COLUMNS (REDUCED)	70 PSF	30 PSF
3. CONCENTRATED WHEEL LOAD (ON 20 SQ. INCHES)		2000 LB.
4. BUMPER IMPACT LOAD, OVER 1 FOOT SQUARE, LOCATED 18 INCHES ABOVE FINISHED FLOOR, ULTIMATE		10,000 LB.
5. SLABS ON GRADE		50 PSF
6. STAIRS, LANDINGS AND LOBBIES		100 PSF
7. WIND DESIGN		80 MPH
8. PER PCI DESIGN HANDBOOK (4TH EDITION)		
A. DESIGN TEMPERATURE DIFFERENTIAL		80 DEGREES F.
B. ANNUAL AVERAGE AMBIENT RELATIVE HUMIDITY		74%

C. THE DEGREE OF FIRE RESISTANCE MEASURED IN TERMS OF SATISFACTORY PERFORMANCE COMPLYING WITH THE CONDITIONS OF ACCEPTANCE OF ASTM E119 AS FOLLOWS:

STRUCTURAL ELEMENT	HOURS PROVIDED	HOURS REQUIRED
1. POST-TENSIONED CONCRETE SLABS	2	1
2. POST-TENSIONED CONCRETE BEAMS	2	1
3. CONCRETE COLUMNS	2	1
4. STAIR/ LOBBIES	2	1

D. FUTURE EXPANSION

THIS PARKING FACILITY IS NOT DESIGNED FOR FUTURE EXPANSION.

E. EXISTING CONSTRUCTION:

PRIOR TO FABRICATION AND ERECTION OF ANY MATERIAL OR PLACEMENT OF CONCRETE FOR NEW CONSTRUCTION, FIELD VERIFY ALL EXISTING ELEVATIONS, DIMENSIONS, AND CONDITIONS SHOWN ON THE DRAWINGS. REPORT ALL DISCREPANCIES TO THE ENGINEER IMMEDIATELY.

II. FOUNDATION WORK

A. FOUNDATIONS, RETAINING WALLS, BASEMENT WALLS, FOUNDATION DRAINAGE AND SLABS ON GRADE HAVE BEEN DESIGNED IN ACCORDANCE WITH THE RECOMMENDATIONS OF BRAUN INTERTEC CORPORATION, REPORT NUMBER BABX-99-382 DATED AUGUST 12, 1999. FOR ADDITIONAL INFORMATION SEE DIVISION 2 OF THE SPECIFICATIONS.

B. FOUNDATION DESIGN

DESCRIPTION	ALLOWABLE LOAD
1. SPREAD FOOTINGS	5000 PSF
2. STRIP FOOTINGS	5000 PSF

C. RETAINING WALL DESIGN

1. DESIGN EQUIVALENT FLUID PRESSURE BEHIND BASEMENT TYPE WALLS LATERALLY SUPPORTED TOP AND BOTTOM. — P = 60 PSF/FT
2. DESIGN EQUIVALENT FLUID PRESSURE BEHIND CANTILEVERED RETAINING WALLS. — P = 45 PSF/FT

D. SEE SECTIONS OF DIVISION 2 OF THE SPECIFICATION FOR EXCAVATION AND COMPACTION.

E. SHALLOW FOOTINGS SHALL BEAR ON:

1. COMPACTED ENGINEERED FILL, OR
2. SURFACE COMPACTED NATURAL SOIL, OR
3. UNDISTURBED NATURAL SOIL

THE EXCAVATION DEPTHS INDICATED ON THE DRAWINGS ARE TO BE USED FOR BIDDING PURPOSES ONLY AND ARE APPROXIMATE.

F. PRIOR TO PLACEMENT OF GRANULAR FILL BELOW THE SLAB-ON-GRADE, THE ENTIRE SURFACE SHALL BE SURFACE COMPACTED (VIBRATORY) AND OBSERVED BY THE TESTING AGENCY FOR SOFT OR UNSTABLE MATERIAL. UNACCEPTABLE MATERIAL SHALL BE REMOVED AND REPLACED WITH APPROVED GRANULAR FILL.

III. CONCRETE

A. MATERIAL PROPERTIES - CONCRETE:

	F'C, PSI AT 28 DAYS	MAX. W/C RATIO	MAX. SLUMP, INCHES	TOTAL AIR CONTENT +/- 1-1/2%
1. CAST-IN-PLACE CONCRETE				
FOOTINGS/PIERS	4000	0.45	4	NO TEST
COLUMNS	5000	0.40	3*	5
WALLS	4000	0.45	3*	5
SUPERSTRUCTURE				
SLABS, BEAMS	5000*	0.40	3*	7
SLAB-ON-GRADE	4000*	0.40	3*	7
STAIRS, LANDINGS,				
LOBBIES	5000	0.40	3*	7
POUR STRIPS	5000	0.40	3*	7-
ALL OTHER	4000	0.45	4	5
2. PRECAST CONCRETE				
ARCHITECTURAL PRECAST	4000	0.40	NONE	6%
WALL PANEL	6000	0.38	NONE	6%
3. OTHER CONCRETE				
MASONRY WALL GROUT FILL	3000		8-10	NO TEST
N.S.N.S. GROUT	8000		0	NO TEST

* PRIOR TO ADDING SUPERPLASTICIZER.

3. FOR ADDITIONAL INFORMATION REGARDING AIR ENTRAINMENT, SEE SECTION 03300 OF THE SPECIFICATION.

4. ALL CONCRETE IS NORMAL WEIGHT: 145 PCF.

add #2 (5.)

B. MATERIAL PROPERTIES - REINFORCING AND CONNECTION STEEL:

	FY, PSI	ASTM
WELDED BARS	60,000	A615 *
OR	60,000	A706
ALL BARS, U.N.	60,000	A615
WELDED WIRE FABRIC (SMOOTH)	65,000	A185
POST-TENSIONING STRAND	270,000 (FPU)	A416
COIL BOLTS AND COIL RODS	65,000, U.N.	
WELDING FOR STEEL REINF. BARS		AWS D1.4-91
DEFORMED BAR ANCHORS	70,000	A496
HEADED ANCHOR STUDS	60,000 (FS)	A108

* WITH PROPER PREHEAT PER AWS STANDARDS.

C. GENERAL NOTES FOR CAST-IN-PLACE CONCRETE

1. COLUMN REINFORCING TO BE CONTINUOUS, OR TO BE SPLICED ACCORDING TO ACI 318-95, SECTION 12.14.
2. PROVIDE EXTRA REINFORCING AROUND ALL OPENINGS, INCLUDING DOOR OPENINGS: TWO #5 BARS ALL FOUR SIDES OF EACH OPENING AND EXTEND 2 FEET BEYOND THE CORNERS OF THE OPENING. ADD TWO #4 BARS 4 FEET LONG AS DIAGONAL BARS AT EACH CORNER.
3. WHERE SHOWN HOOKED, PROVIDE STANDARD 90 DEGREE BAR HOOKS UNLESS NOTED OTHERWISE ON THE DRAWINGS.
4. WHEN REINFORCEMENT IS LAP SPLICED, PROVIDE CLASS B SPLICE TYPICAL, UNLESS NOTED.
5. PROVIDE A 3/4 INCH CHAMFER ON ALL EXPOSED CORNERS OF CONCRETE. TOP EDGES OF WALLS MAY BE TOOLED.
6. PROVIDE CONTROL/CONSTRUCTION JOINTS AS SHOWN ON THE DRAWINGS. FOR ADDITIONAL INFORMATION, SEE SECTION 03300 OF THE SPECIFICATIONS.
7. ALL INSERTS AND COIL RODS SHALL BE GALVANIZED OR EPOXY COATED. SEE SECTIONS OF DIVISION 3 OF THE SPECIFICATIONS FOR ADDITIONAL INFORMATION.

D. CONCRETE PROTECTION FOR REINFORCEMENT:

THE MINIMUM CONCRETE PROTECTION FOR REINFORCEMENT SHALL BE PER ACI 318-95, SECTION 7.7.

FOR PRESTRESSED AND NON-PRESTRESSED REINFORCEMENT IN PRESTRESSED/PRECAST CONCRETE MEMBERS, THE MINIMUM CONCRETE PROTECTION AT TOP OF MEMBERS SHALL BE 1-1/2".

FOR PRESTRESSED AND NON-PRESTRESSED REINFORCEMENT IN CAST-IN-PLACE, POST-TENSIONED CONCRETE, THE MINIMUM CONCRETE PROTECTION SHALL BE AS FOLLOWS:

	CONCRETE COVER (INCHES)
SLAB TOP REINFORCEMENT	2
SLAB BOTTOM REINFORCEMENT	1
BEAM TOP REINFORCEMENT, U.N.	3
BEAM STIRRUPS AT SIDES AND BOTTOM OF BEAM	1-1/2
BEAM STIRRUPS AT TOP OF BEAM	2-1/2
COLUMN TIES	1 1/2
WALLS	1 1/2

E. EPOXY COATING FOR REINFORCEMENT AND ANCHORS:

1. EPOXY COAT THE FOLLOWING:
   - A. ALL BONDED REINFORCEMENT IN SLABS & CURBS.
   - B. SUPPORT BARS FOR SLAB REINFORCEMENT.
   - C. #4 BAR CONTINUOUS AT SLAB P/T ANCHORS
   - D. ALL P/T ANCHORS AND COUPLERS.
   - E. VERTICAL BARS IN BUMPER WALLS.
   - F. ALL REINFORCEMENT IN STAIR SLABS, STAIR BEAMS, LOBBY SLABS, & STAIR LANDINGS.
   - G. ALL BEAM STIRRUPS AND BEAM TOP REINFORCING.
   - H. COLUMN TIES.
2. FOR ADDITIONAL INFORMATION REGARDING EPOXY COATING, SEE SECTION 03300 OF THE SPECIFICATIONS.

IV. CONCRETE MASONRY

A. MATERIAL PROPERTIES

COMPRESSIVE STRENGTH OF MASONRY, F'M = 1500 PSI. MORTAR TYPE "M" OR "S".

B. GENERAL CONCRETE MASONRY NOTES

1. PROVIDE DOWELS BETWEEN FOUNDATIONS AND WALLS EQUAL TO SIZE AND SPACING OF THE VERTICAL WALL REINFORCING, UNLESS NOTED OTHERWISE.
2. MINIMUM REINFORCEMENT FOR MASONRY WALLS SUBJECT TO BUMPER LOADS SHALL BE #5 @ 16" O.C. FOR A HEIGHT OF 2'-0" ABOVE FLOOR AND GROUT ALL BLOCK CORES SOLID UP TO 2'-0" ABOVE FLOOR. MINIMUM REINFORCEMENT FOR MASONRY WALLS NOT SUBJECT TO BUMPER LOADS SHALL BE #5 @ 32" O.C. PLUS ONE #5 VERTICAL AT CORNERS, EDGES OF OPENINGS AND ENDS OF WALLS. GROUT BLOCK CELLS WITH REINFORCEMENT FULL.
3. IN MASONRY WALLS, PROVIDE 8-INCH-WIDE BOND BEAM LINTELS REINFORCED WITH TWO #5 BARS CONTINUOUS UNLESS SHOWN OTHERWISE ON THE DRAWINGS. CONCRETE BLOCK FOR THREE COURSES DIRECTLY BELOW BOND BEAM BEARING AND EXTENDING OUT AT AN ANGLE OF 45 DEGREES SHALL BE SOLID BLOCK OR SHALL BE GROUTED SOLID, UNLESS NOTED OTHERWISE.
4. PROVIDE CONTROL JOINTS IN MASONRY WALLS AT 20 FEET ON CENTER MAXIMUM OR AS NOTED ON THE DRAWINGS.
5. GROUT SOLID ONLY THOSE CELLS CONTAINING REINFORCING STEEL. ALL OTHER CELLS SHALL BE FILLED WITH INSULATION. WHERE SHOWN ON THE ARCHITECTURAL DRAWINGS.

V. STRUCTURAL STEEL

A.

	FY, PSI	ASTM
STRUCTURAL SHAPES	36,000	A36
BOLTS (1/2" DIA. TO 1" DIA.), U.N.	92,000	A325
ANCHOR BOLTS	36,000	A36
WELDING ELECTRODES	E70XX	AWS D1.1-91
STEEL PIPES	35,000	A53
STRUCTURAL TUBES (ROUNDS & SHAPES)	46,000	A500

B. GENERAL STRUCTURAL STEEL NOTES

LINTELS SHALL HAVE A MINIMUM END BEARING ON MASONRY OF 8 INCHES, BUT NOT LESS THAN 1 INCH OF SUCH BEARING FOR EACH FOOT OF OPENING WIDTH.

VI. MISCELLANEOUS

A. FOR EXACT SIZES AND LOCATIONS OF MECHANICAL AND ELECTRICAL ITEMS AND OPENINGS, CONSULT RESPECTIVE SUBCONTRACTORS.

B. SEE SPECIFICATIONS FOR ADDITIONAL INFORMATION.

C. INSERTS CALLED OUT ON DRAWINGS SHALL BE AS DESIGNATED BELOW FOR DIAMETERS INDICATED. NOMENCLATURE IS FOR RICHMOND SCREW ANCHOR COMPANY, INC.

1. 1/2 INCH DIAMETER,	TYPE L
2. 3/4 INCH DIAMETER,	TYPE EC-2, 2 STRUT
3. 1 INCH DIAMETER,	TYPE EC-4, 4 STRUT
4. 1-1/4 INCH DIAMETER,	TYPE EC-4, 4 STRUT

PROVIDE COIL BOLTS AND RODS WITH THE NECESSARY PENETRATION INTO INSERTS TO DEVELOP THEIR FULL STRENGTH PER THE MANUFACTURER'S RECOMMENDATIONS.

D. ABBREVIATIONS

A.B.	=	ANCHOR BOLT
C.I.P.	=	CAST-IN-PLACE CONCRETE
C.J.	=	CONTROL JOINT/CONSTRUCTION JOINT
C.M.U.	=	CONCRETE MASONRY UNIT
D.B.A.	=	DEFORMED BAR ANCHOR
E.F.	=	EACH FACE
E.J.	=	EXPANSION JOINT
E.T.C.	=	ELEVATION TOP OF CONCRETE
E.T.F.	=	ELEVATION TOP OF FOOTING
E.T.W.	=	ELEVATION TOP OF WALL
E.W.	=	EACH WAY
E.W.E.F.	=	EACH WAY, EACH FACE
E.W.P.	=	ELEVATION WORKING POINT
F.D.	=	FLOOR DRAIN
G.C.	=	GENERAL CONTRACTOR
H.A.S.	=	HEADED ANCHOR STUDS
M.D.	=	MID-DEPTH
N.S.N.S.	=	NON-SHRINK, NON-STAIN
O.C.	=	ON CENTER
P.L.	=	PROPERTY LINE
P/C	=	PRECAST CONCRETE
P/T	=	POST-TENSIONED CONCRETE
R.D.	=	ROOF DRAIN
S.O.G.	=	SLAB-ON-GRADE
T.D.	=	TRENCH DRAIN
U.N.	=	UNLESS NOTED
W.W.F.	=	WELDED WIRE FABRIC

E. DO NOT SCALE THE DRAWINGS

BUILDING DEPARTMENT
MAR 01 2000
CITY OF EDINA

WALKER PARKING CONSULTANTS
5775 Wayzata Boulevard
Suite 425
Minneapolis, MN 55416
612.595.9116 Ph.
612.595.9518 Fax

EDINA 49 1/2 NORTH
PARKING FACILITY ADDITION
EDINA MINNESOTA

SEAL

I HEREBY CERTIFY THAT THIS PLAN, SPECIFICATION, OR REPORT WAS PREPARED BY ME OR UNDER MY DIRECT SUPERVISION AND THAT I AM A DULY REGISTERED ENGINEER UNDER THE LAWS OF THE STATE OF MINNESOTA

NAME [signature]
DATE 3/1/00 REG. NO. 18307

ISSUED:

NO.	DESCRIPTION	DATE
	ISSUED FOR BIDS	3-1-00

SHEET TITLE:

General Notes Isometric & Typical Details

Scale: As Noted
Project No. 21-2874.00
Drawn By: RJL
Checked By:
Sheet No.

S0.1

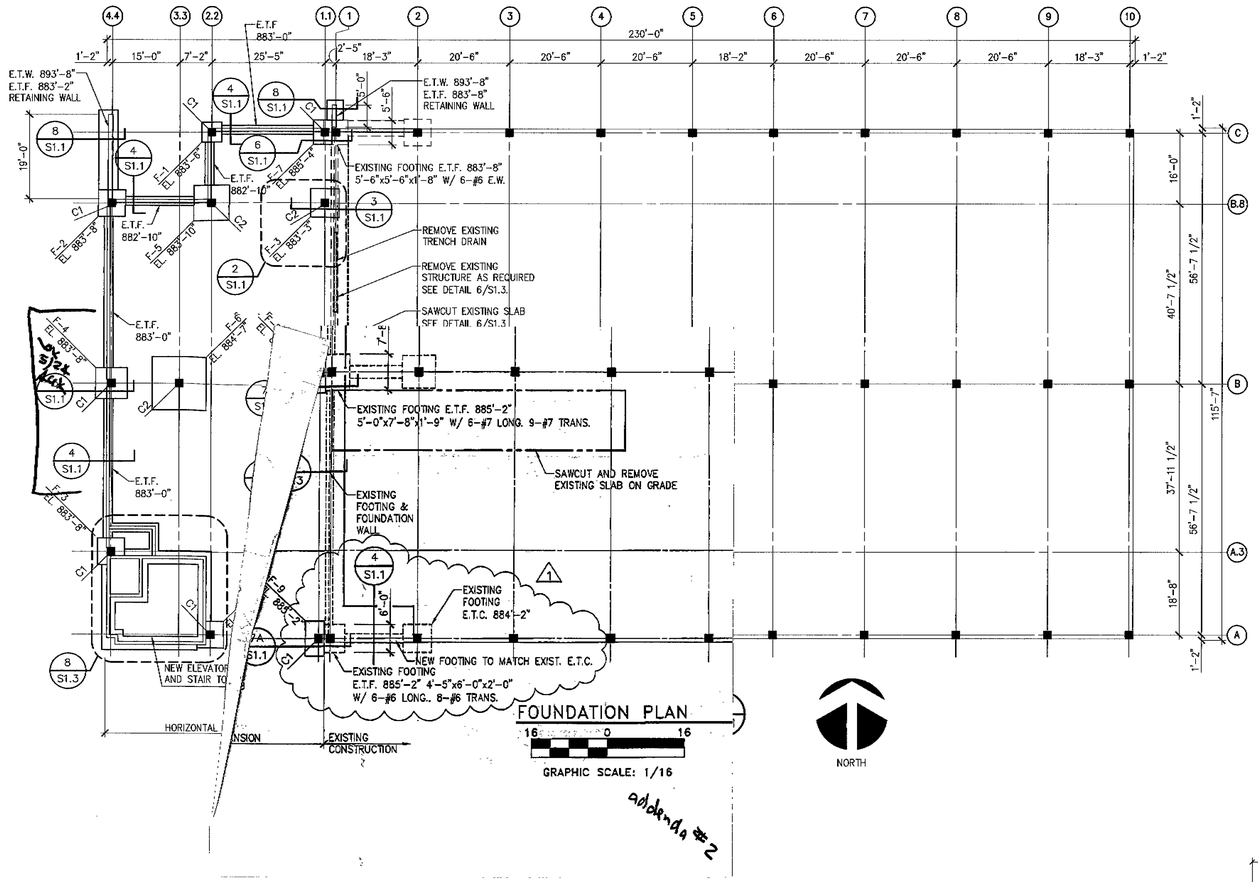

FOUNDATION PLAN

GRAPHIC SCALE: 1/16

FOOTING SCHEDULE						
MARK	SIZE			REINFORCEMENT		REMARKS
	W	L	D	LONG.	TRANS.	
F1	4'-6"	4'-6"	1'-8"	(6) #4	(6) #4	
F2	6'-0"	6'-0"	1'-6"	(6) #6	(6) #6	
F3	6'-6"	6'-6"	1'-8"	(5) #7	(5) #7	
F4	7'-0"	7'-0"	1'-9"	(6) #7	(6) #7	
F5	8'-0"	8'-0"	2'-0"	(6) #8	(6) #8	
F6	12'-0"	12'-0"	2'-10"	(10) #9	(10) #9	
F7	SEE REMARKS	5'-6"	1'-8"/ 3'-4"	SEE REMARKS	SEE REMARKS	SEE DETAIL 6/S1.1
F8	5'-0"	8'-8"	1'-9"	(7) #7	(11) #7	SEE DETAIL 7/S1.1
F9	4'-10"	7'-6"	2'-0"	(6) #6	(10) #6	SEE DETAIL 7A/S1.1

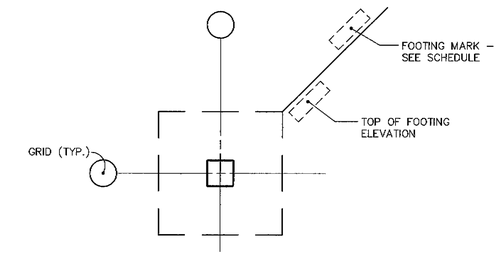

FOUNDATION LEGEND (FOR FOOTINGS) 2/S1.1

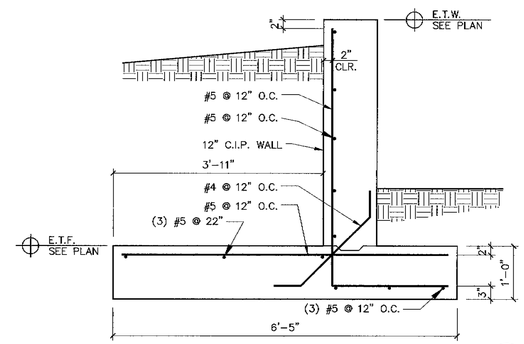

SITE RETAINING WALL DETAIL 8/S1.1

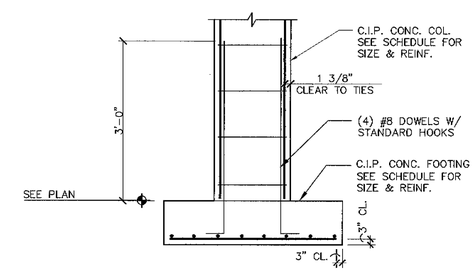

COLUMN/FOOTING DETAIL 3/S1.1

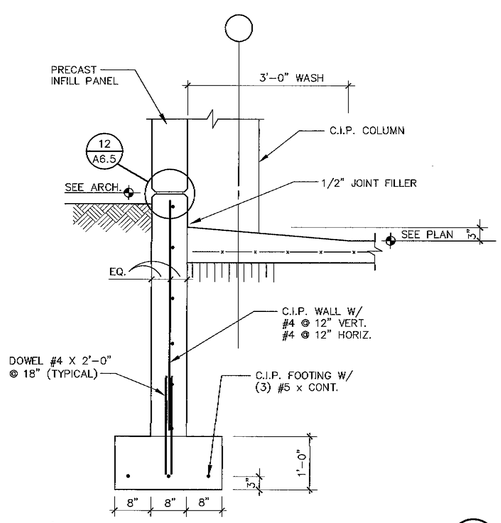

WALL/PANEL DETAIL 4/S1.1

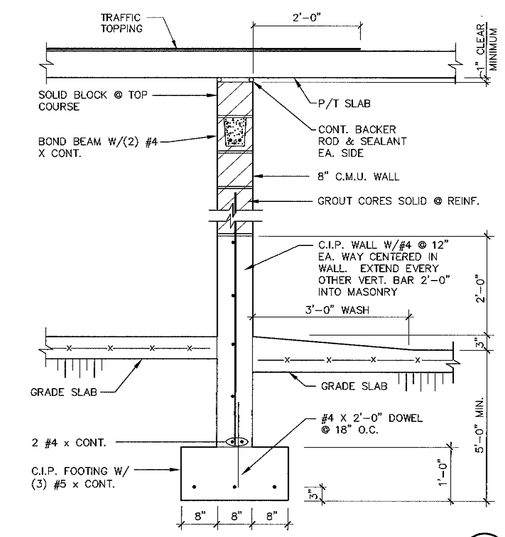

MASONRY WALL DETAIL 5/S1.1

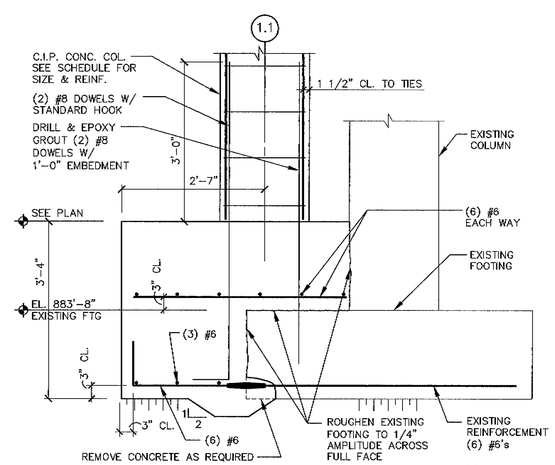

COLUMN/FOOTING DETAIL 6/S1.1

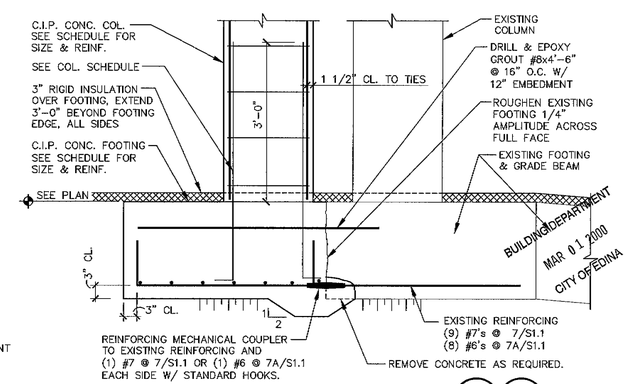

BUILDING DEPARTMENT MAR 01 2000 CITY OF EDINA

COLUMN/FOOTING DETAIL 7/S1.1 7A/S1.1

WALKER PARKING CONSULTANTS
5775 Wayzata Boulevard
Suite 425
Minneapolis, MN 55416
612.595.9116 Ph.
612.595.9518 Fax

EDINA 49 1/2 NORTH
PARKING FACILITY ADDITION
EDINA MINNESOTA

SEAL

I HEREBY CERTIFY THAT THIS PLAN, SPECIFICATION, OR REPORT WAS PREPARED BY ME OR UNDER MY DIRECT SUPERVISION AND THAT I AM A DULY REGISTERED ENGINEER UNDER THE LAWS OF THE STATE OF MINNESOTA

NAME Dennis J Mayer
DATE 3/1/00 REG. NO. 18307

ISSUED:		
NO.	DESCRIPTION	DATE
	ISSUED FOR BID	3-1-00

SHEET TITLE:
Foundation Plan & Details

Scale: As Noted
Project No. 21-2874.00
Drawn By: RJL
Checked By:
Sheet No. S1.1

G:\21-2874.00-Edina 49.5\DRAWINGS\STRUCTURAL\2874-S11.dwg FEB 25, 2000 3:27 p.m. user: dahlinj
Copyright 2000. All rights reserved. No part of this document may be reproduced in any form or by any means without permission from Walker Parking Consultants/Engineers, Inc.

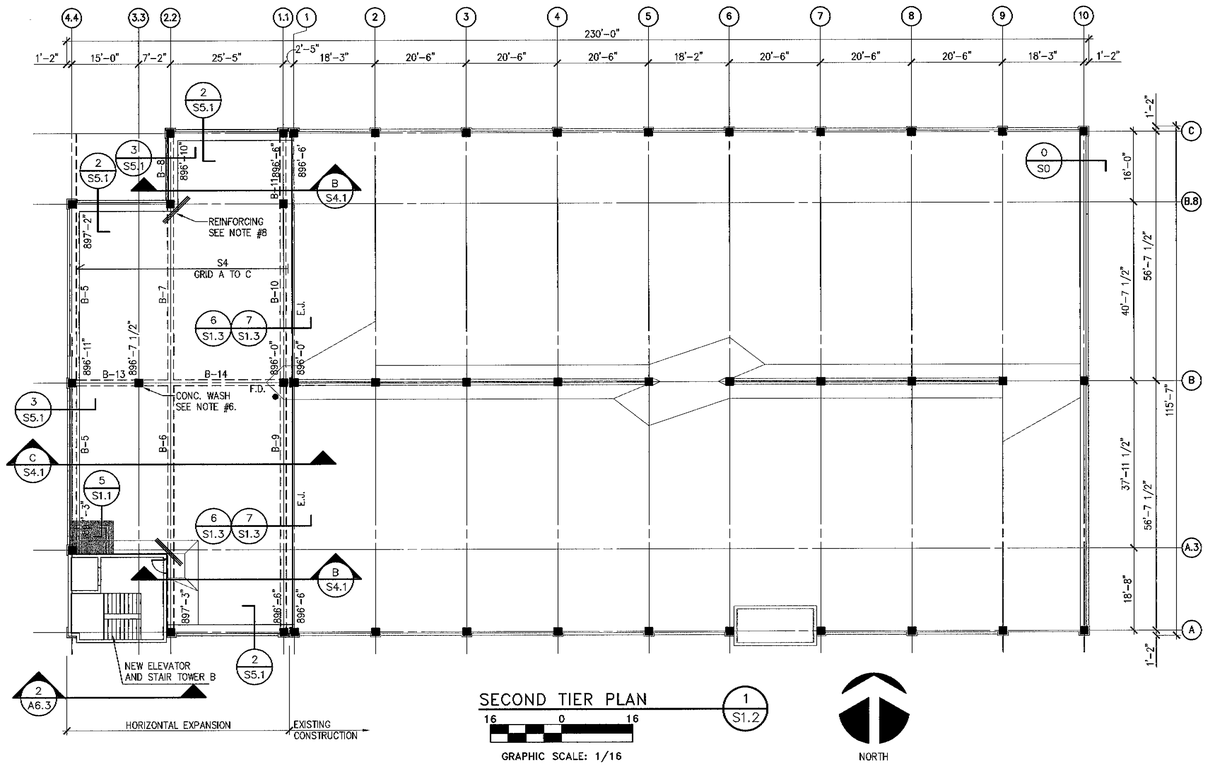

SECOND TIER PLAN (1/S1.2)

GRAPHIC SCALE: 1/16

NORTH

SHEET NOTES:

1. SEE SHEET S0.1 FOR GENERAL NOTES.
2. VERIFY ALL DIMENSIONS WITH ARCHITECTURAL DRAWINGS.
3. SEE SHEET S3.1 FOR COLUMN AND BEAM SCHEDULES.
4. SEE SHEET S4.1 FOR SLAB PROFILES.
5. SLAB ON GRADE. 5" CONCRETE SLAB REINFORCE WITH #3 @ 16" O.C. E.W. MID-DEPTH OF SLAB.
6. CORNER WASH AROUND INTERIOR COLUMNS, 1" HIGH x 1'-0" WIDE TYPICAL.
7. SEALANT DETAIL, SEE 4/S1.2 TYPICAL
8. REINFORCING 5-#5 x 8'-0", TYPICAL AS INDICATED BY "////".
9. FLOOR ELEVATIONS BETWEEN POINTS SHOWN, USE STRAIGHT LINE INTERPOLATION. SEE PLAN ELEVATION DETAIL 3/S1.2

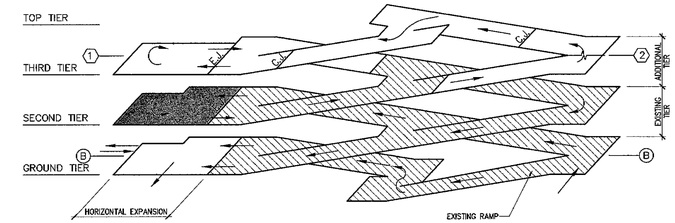

ISOMETRIC

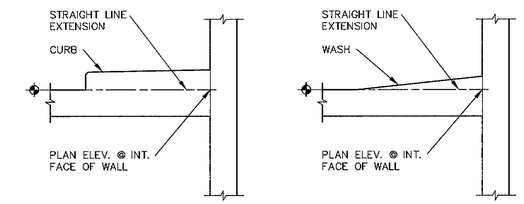

PLAN ELEVATION KEY (3/S1.2)

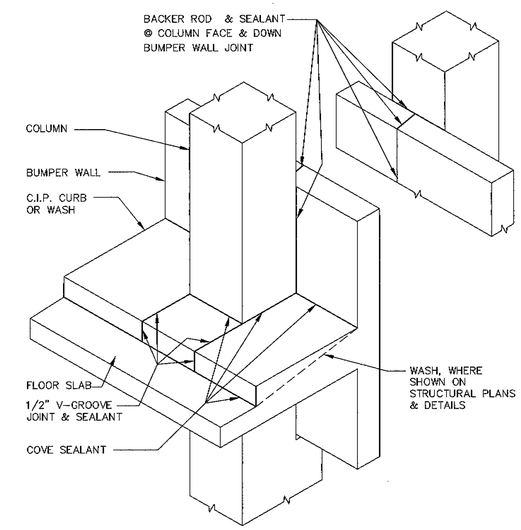

INSIDE FACE OF WALL/CURB/COLUMN SEALANT (4/S1.2)

TYPICAL

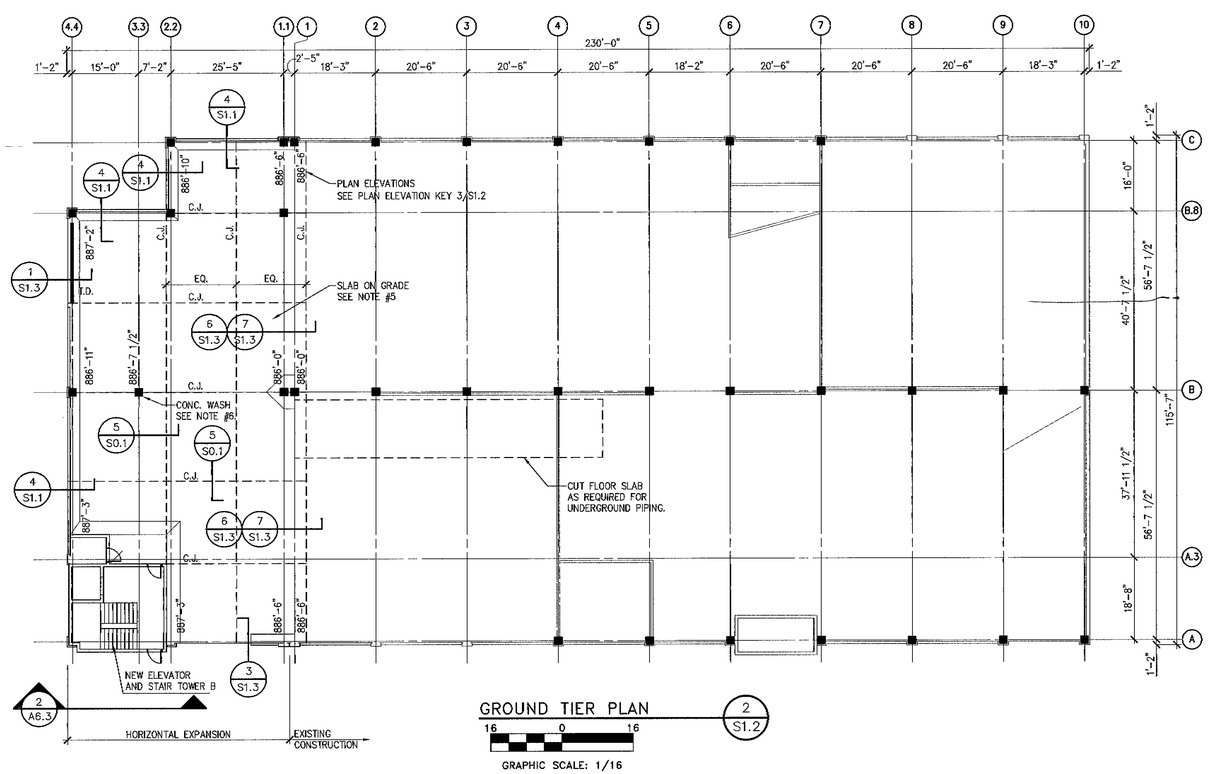

GROUND TIER PLAN (2/S1.2)

GRAPHIC SCALE: 1/16

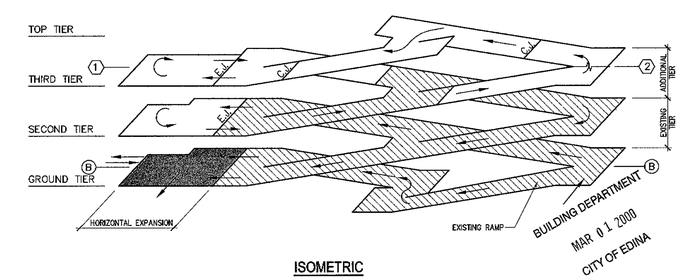

ISOMETRIC

WALKER PARKING CONSULTANTS
5775 Wayzata Boulevard
Suite 425
Minneapolis, MN 55416
612.595.9116 Ph.
612.595.9518 Fax

EDINA 49 1/2 NORTH PARKING FACILITY ADDITION

EDINA MINNESOTA

SEAL

I HEREBY CERTIFY THAT THIS PLAN, SPECIFICATION, OR REPORT WAS PREPARED BY ME OR UNDER MY DIRECT SUPERVISION AND THAT I AM A DULY REGISTERED ENGINEER UNDER THE LAWS OF THE STATE OF MINNESOTA

NAME [signature]

DATE 3/1/00 REG. NO. 18307

ISSUED:

NO.	DESCRIPTION	DATE
	ISSUED FOR BIDS	3-1-00

SHEET TITLE:

Ground Tier & Second Tier Plans

Scale: As Noted

Project No. 21-2874.00

Drawn By: RJL

Checked By:

Sheet No.

S1.2

G:\21-2874.00-Edina 49.5\DRAWINGS\STRUCTURAL\2874-S12.dwg FEB 25, 2000 3:33 p.m. user: dahlinj

Copyright 2000. All rights reserved. No part of this document may be reproduced in any form or by any means without permission from Walker Parking Consultants/Engineers, Inc.

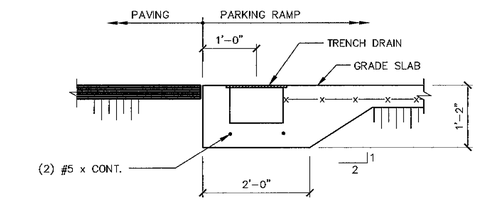

EDGE OF SLAB DETAIL (1 / S1.3)

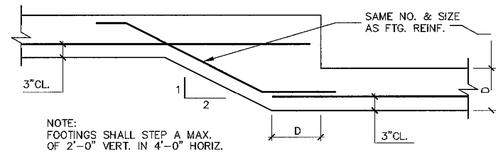

STEP FOOTING DETAIL (2 / S1.3)

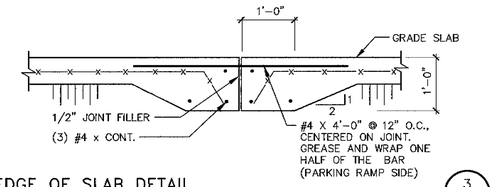

EDGE OF SLAB DETAIL (3 / S1.3)

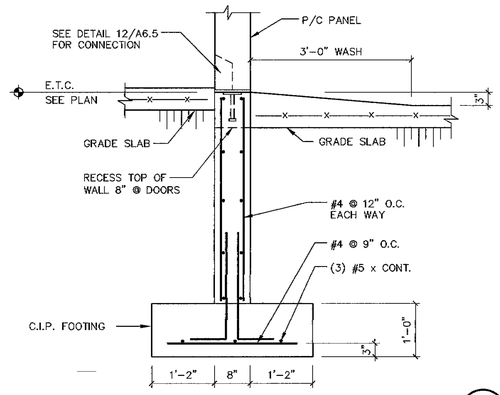

C.I.P. WALL DETAIL (4 / S1.3)

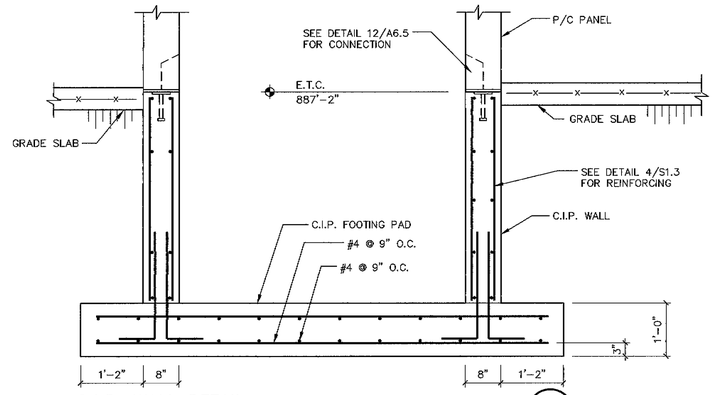

C.I.P. WALL DETAIL (5 / S1.3)

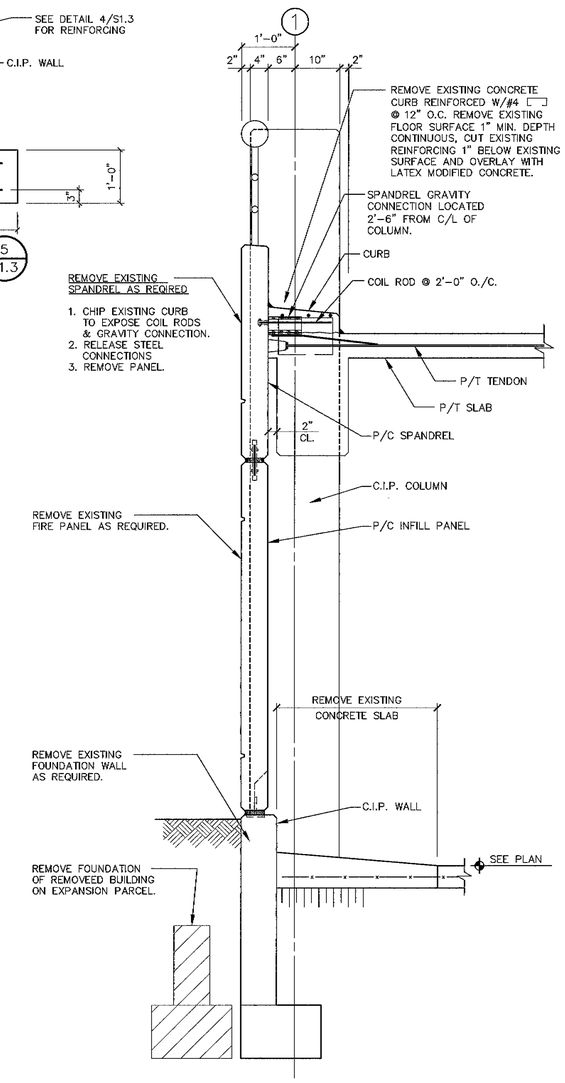

EXISTING WALL/PANEL SECTION & DEMOLITION NOTES (6 / S1.3)

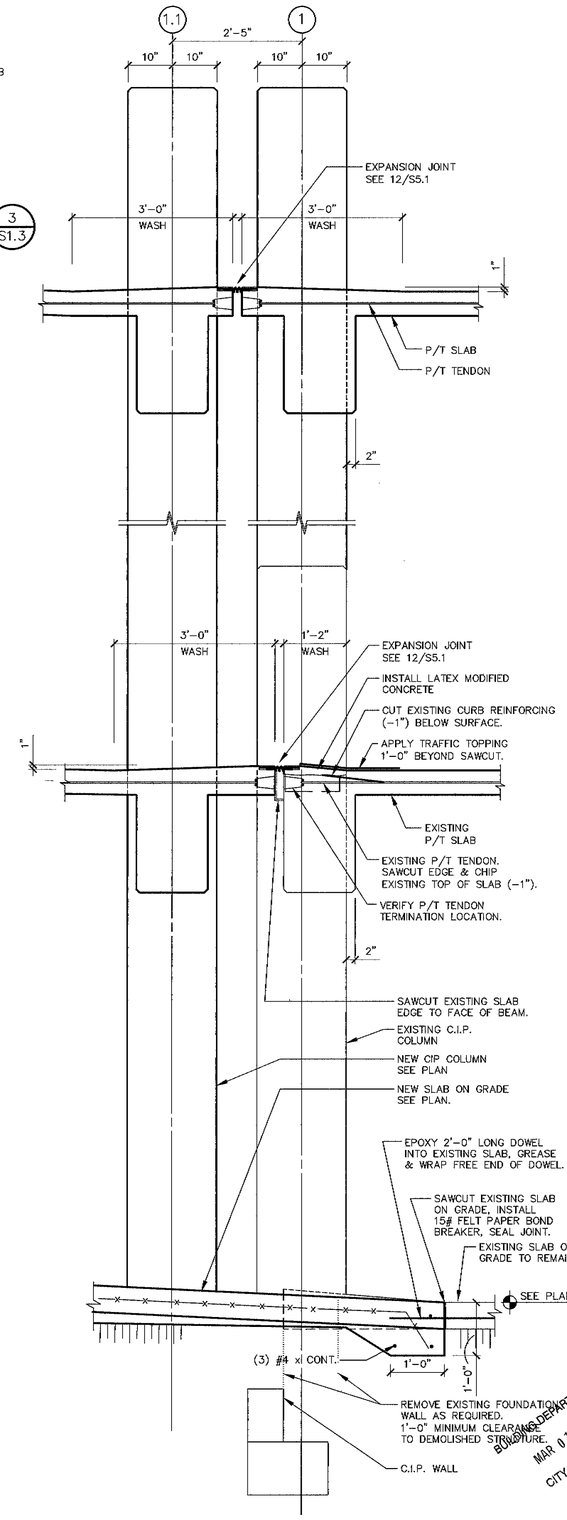

EXPANSION JOINT SECTION (7 / S1.3)

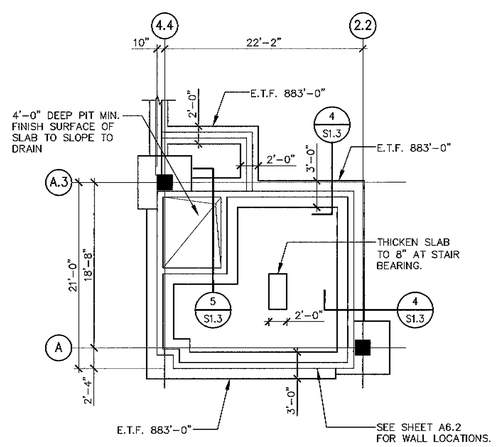

STAIR TOWER 'B' FOUNDATION PLAN (8 / S1.3)

G:\21-2874.00-Edina 49.5\DRAWINGS\STRUCTURAL\2874-S13.dwg FEB 25, 2000 3:34 p.m. user: dahlinj

Copyright 2000. All rights reserved. No part of this document may be reproduced in any form or by any means without permission from Walker Parking Consultants/Engineers, Inc.

WALKER PARKING CONSULTANTS
5775 Wayzata Boulevard
Suite 425
Minneapolis, MN 55416
612.595.9116 Ph.
612.595.9518 Fax

EDINA 49 1/2 NORTH
PARKING FACILITY ADDITION
EDINA MINNESOTA

SEAL

I HEREBY CERTIFY THAT THIS PLAN, SPECIFICATION, OR REPORT WAS PREPARED BY ME OR UNDER MY DIRECT SUPERVISION AND THAT I AM A DULY REGISTERED ENGINEER UNDER THE LAWS OF THE STATE OF MINNESOTA.

NAME Dana L. Mapp
DATE 3/1/00 REG. NO. 18307

ISSUED:

NO.	DESCRIPTION	DATE
	ISSUED FOR BIDS	3-1-00

SHEET TITLE:
Foundation Details

Scale: As Noted
Project No. 21-2874.00
Drawn By: JLD
Checked By:
Sheet No.
S1.3

BUILDING DEPARTMENT
MAR 01 2000
CITY OF EDINA

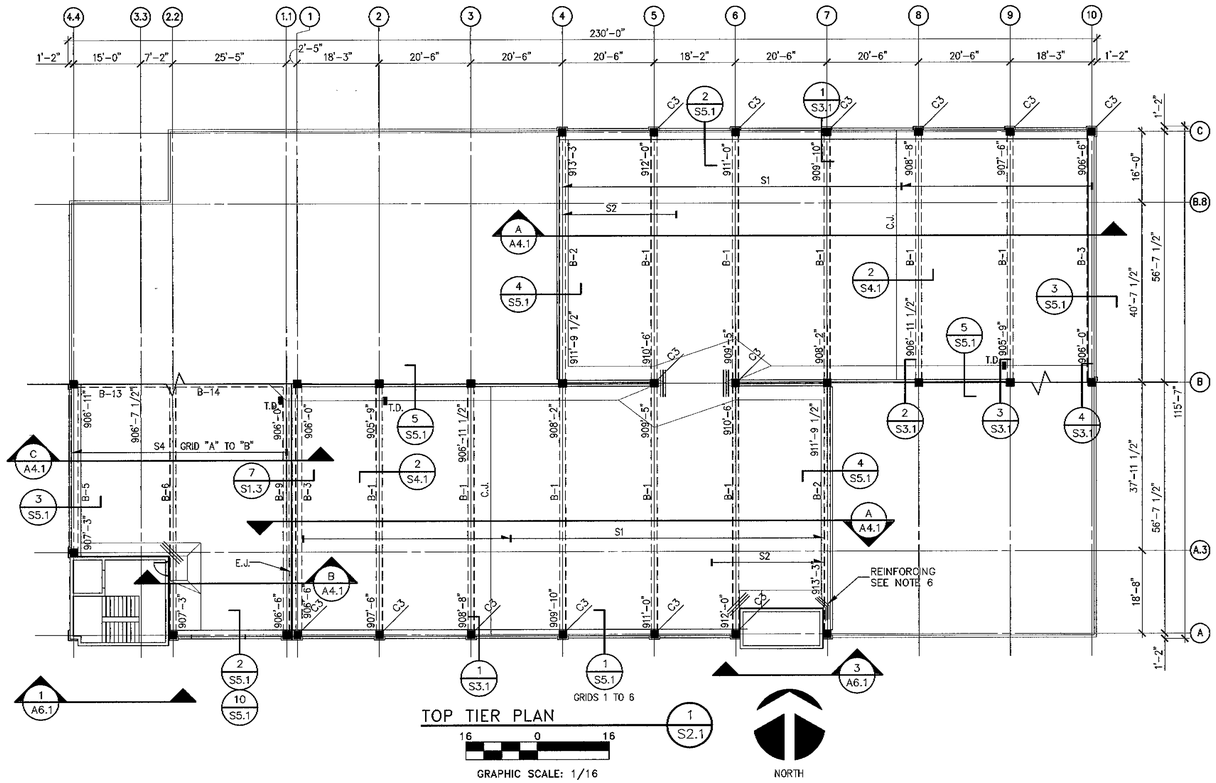

TOP TIER PLAN 1 S2.1

GRAPHIC SCALE: 1/16

SHEET NOTES:

1. SEE SHEET S0.1 FOR GENERAL NOTES.
2. VERIFY ALL DIMENSIONS WITH ARCHITECTURAL DRAWINGS.
3. SEE SHEET S3.1 FOR COLUMN AND BEAM SCHEDULES.
4. SEE SHEET S4.1 FOR SLAB PROFILES.
5. SEALANT DETAIL, SEE 4/S1.2 TYPICAL.
6. REINFORCEMENT IN BEAM SIDES 3-#6 x 15'-0" EACH BEAM FACE.
7. REINFORCING 5-#5 x 8'-0", TYPICAL AS INDICATED BY "///".
8. REMOVE EXISTING BARRIER STRAND (GRID B4 TO B5 AND B6 TO B7) AND REPLACE PER DETAIL 5/S5.1. FILL UNUSED SLEEVES IN COLUMNS WITH N.S.N.S. GROUT.
9. FLOOR ELEVATIONS BETWEEN POINTS SHOWN, USE STRAIGHT LINE INTERPOLATION. SEE PLAN ELEVATION DETAIL 3/S1.2.
10. TYPICAL BAY KEY, SEE DETAIL 1/S4.1.

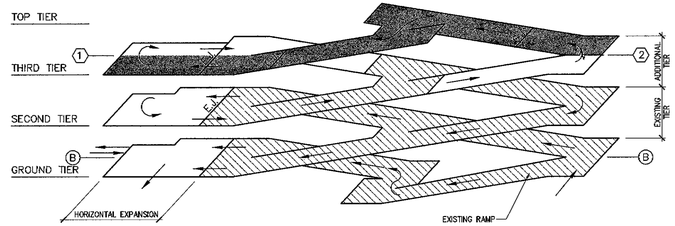

ISOMETRIC

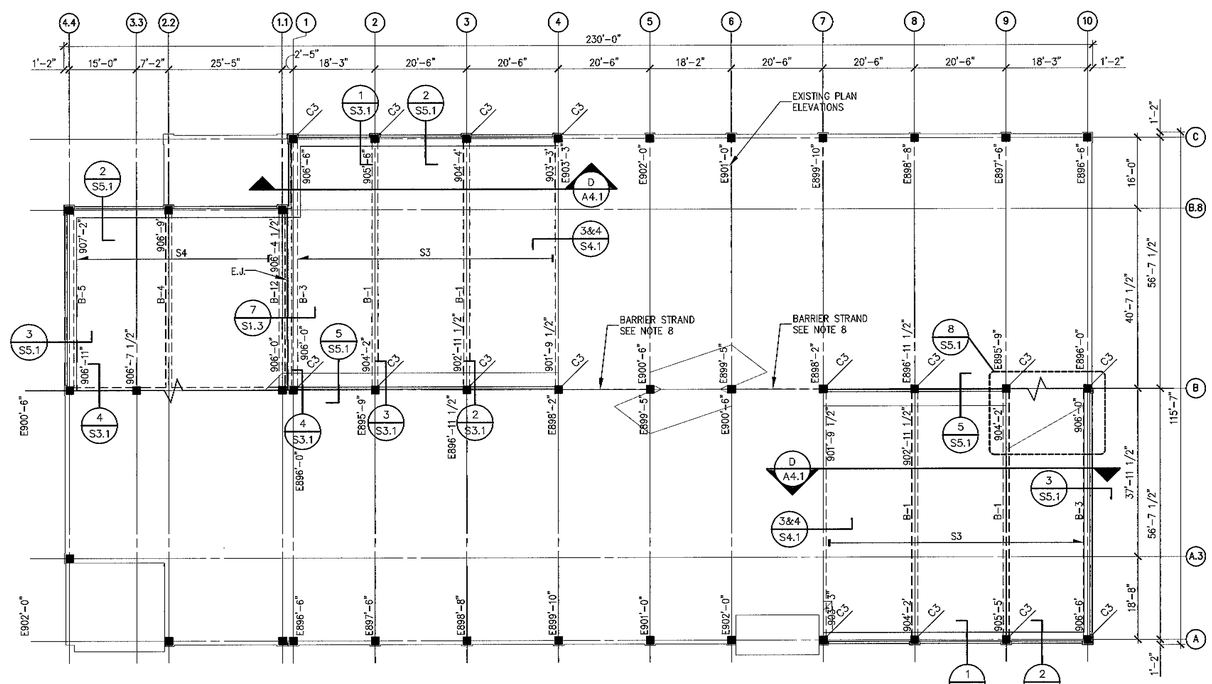

THIRD TIER PLAN 2 S2.1

GRAPHIC SCALE: 1/16

beam schedule + column schedule @ S/3.1

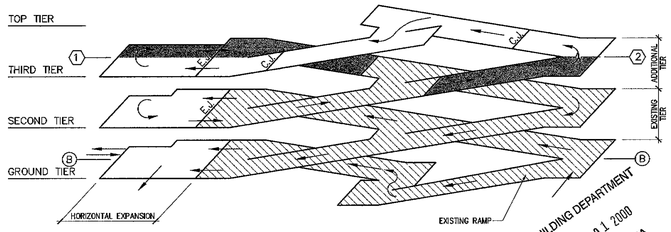

ISOMETRIC

BUILDING DEPARTMENT
MAR 0 1 2000
CITY OF EDINA

WALKER PARKING CONSULTANTS
5775 Wayzata Boulevard
Suite 425
Minneapolis, MN 55416
612.595.9116 Ph.
612.595.9518 Fax

EDINA 49 1/2 NORTH
PARKING FACILITY ADDITION
EDINA MINNESOTA

SEAL

I HEREBY CERTIFY THAT THIS PLAN, SPECIFICATION, OR REPORT WAS PREPARED BY ME OR UNDER MY DIRECT SUPERVISION AND THAT I AM A DULY REGISTERED ENGINEER UNDER THE LAWS OF THE STATE OF MINNESOTA

NAME [signature] DATE 3/1/00 REG. NO. 18357

ISSUED:

NO.	DESCRIPTION	DATE
	ISSUED FOR BIDS	3-1-00

SHEET TITLE:

Third Tier & Top Tier Plans

Scale: As Noted
Project No. 21-2874.00
Drawn By: RJL
Checked By:
Sheet No. S2.1

G:\21-2874.00-Edina 49.5\DRAWINGS\STRUCTURAL\2874-S21.dwg FEB 25, 2000 3:36 p.m. user:dahlinj

Copyright 2000. All rights reserved. No part of this document may be reproduced in any form or by any means without permission from Walker Parking Consultants/Engineers, Inc.

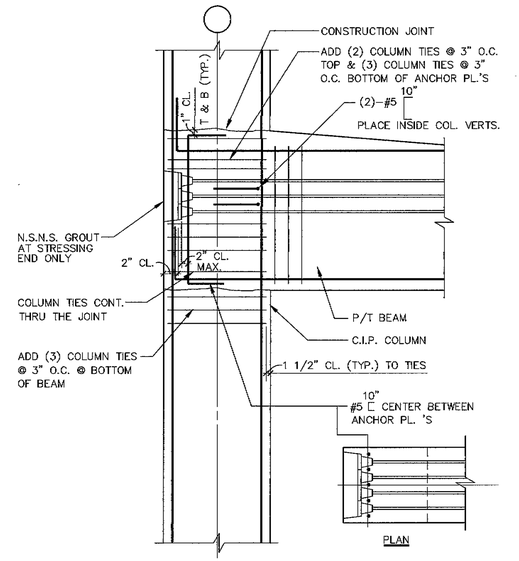

EXTERIOR BEAM / COLUMN DETAIL (1 / S3.1)

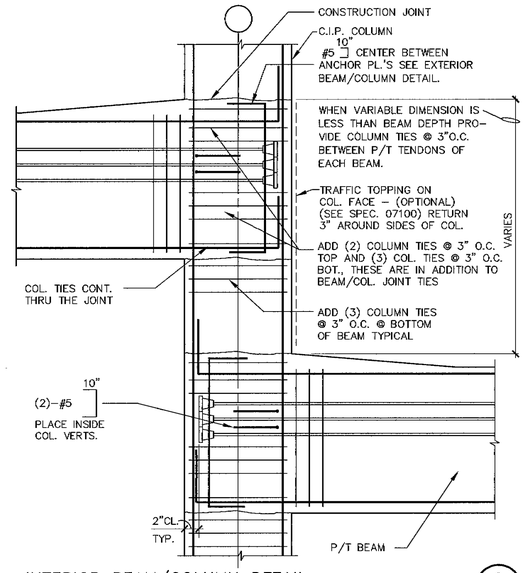

INTERIOR BEAM/COLUMN DETAIL (2 / S3.1)

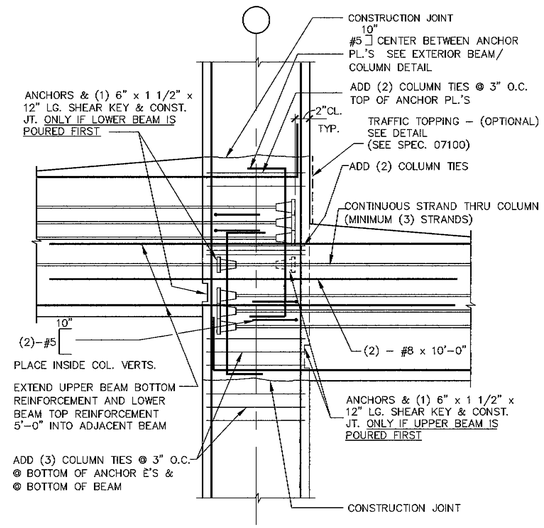

INTERIOR BEAM/COLUMN DETAIL (3 / S3.1)

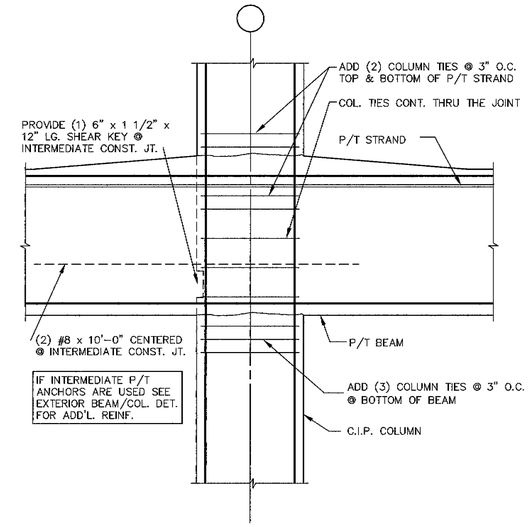

INTERIOR BEAM/COLUMN DETAIL (4 / S3.1)

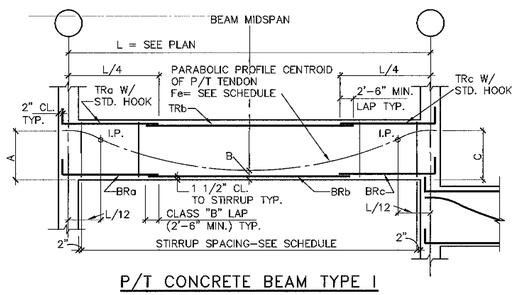

P/T CONCRETE BEAM TYPE I

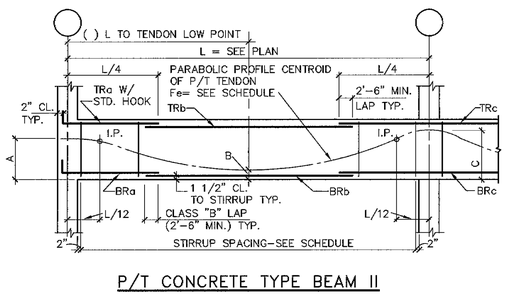

P/T CONCRETE TYPE BEAM II

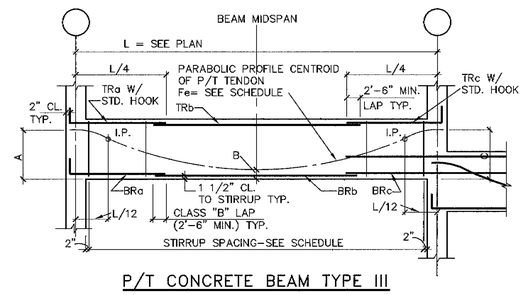

P/T CONCRETE BEAM TYPE III

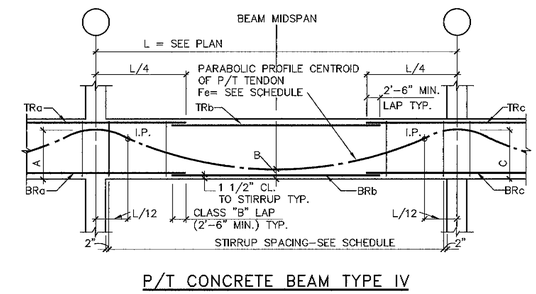

P/T CONCRETE BEAM TYPE IV

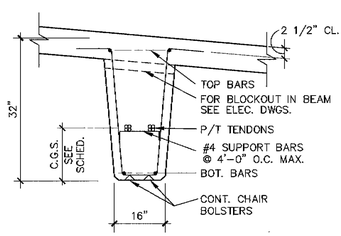

BEAM SECTION A

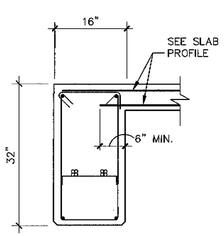

BEAM SECTION B

P/T CONCRETE BEAM SCHEDULE

MARK	TYPE	SECT.	SIZE (IN.) W	SIZE (IN.) D	P/T FORCE Fe (KIPS)	TENDON LOCATION (INCHES) A	TENDON LOCATION (INCHES) B	TENDON LOCATION (INCHES) C	BEAM REINFORCEMENT: TOP REINF. TRa	TRb	TRc	BOTTOM REINF. BRa	BRb	BRc	#4 STIRRUPS U.N. SPACING EA. END	REMARKS
B1	I	A	16	32	450.5	23	3	23	4-#8	2-#4	4-#8	2-#7	4-#10	2-#7	2@2" 5@6" 4@12" R@24"	
B2	I	B	16	32	265	21	3	21	3-#8	2-#4	3-#8	2-#7	4-#9	2-#7	2@2" 5@6" 4@12" R@24"	
B3	II	B	16	32	265	21	3	28	3-#8	2-#4	5-#9	2-#7	4-#9	2-#7	2@2" 5@6" 4@12" R@24"	
B4	II	A	24	32	265	22	3	26.5	5-#8	2-#4	6-#9	2-#7	3-#9	2-#7	2@2" 5@6" 4@12" R@24"	
B5	II	B	16	32	185.5	22	3	22	3-#8	2-#4	3-#9	2-#7	2-#9	2-#7	2@2" 5@6" 4@12" R@24"	
B6	II	A/B	24	32	318	20	3	26.5	4-#8	2-#4	6-#9	2-#7	4-#10	2-#7	2@2" 5@6" 4@12" R@24"	CLOSED STIRRUPS FULL LENGTH
B7	IV	A	24	32	265	28	3	28	6-#9	2-#4	4-#9	SEE REMARKS	3-#9	2-#7	2@2" 5@6" 4@12" R@24"	
B8	II	B	16	32	212	20	16	28	3-#8	2-#4	2-#9	2-#7	2-#9	2-#7	2@2" 5@6" 4@12" R@24"	2-#9 W/STD HOURS & 2-#9 CONT. INTO B8
B9	II	B	16	32	265	22	3	28	3-#8	2-#4	4-#9	2-#7	3-#9	2-#7	2@2" 5@6" 4@12" R@24"	
B10	IV	B	16	32	212	28	3	28	4-#9	2-#4	3-#9	2-#7	3-#9	2-#7	2@2" 5@6" 4@12" R@24"	
B11	II	B	16	32	212	20	3	28	3-#8	2-#4	3-#9	2-#7	2-#9	2-#7	2@2" 5@6" 4@12" R@24"	
B12	II	B	16	32	212	22	3	28	3-#8	2-#4	4-#9	2-#7	3-#9	2-#7	2@2" 5@6" 4@12" R@24"	
B13	Ii	A	30	32	583	17	22	28	5-#8	2-#9	5-#9	4-#7	2-#9	4-#7	2@2" 5@6" 4@12" R@24"	
B14	II	A	30	32	583	20	3	28	5-#8	2-#9	5-#9	4-#7	4-#9	4-#7	2@2" 5@6" 4@12" R@24"	

C.I.P. COLUMN SCHEDULE

MARK	C1	C2	C3
SIZE	20" x 20"	20" x 20"	20" x 20"
TOP TIER			8 - #11 SEE DETAIL 5/S4.1 #4 TIES @ 6" O/C
THIRD TIER			
SECOND TIER	4 - #11 #4 TIES @ 12" O/C	8 - #11 #4 TIES @ 12" O/C	
GROUND TIER			
TOP OF FOOTING			

BUILDING DEPARTMENT MAR 01 2000 CITY OF EDINA

WALKER PARKING CONSULTANTS
5775 Wayzata Boulevard
Suite 425
Minneapolis, MN 55416
612.595.9116 Ph.
612.595.9518 Fax

EDINA 49 1/2 NORTH
PARKING FACILITY ADDITION
EDINA MINNESOTA

SEAL

I HEREBY CERTIFY THAT THIS PLAN, SPECIFICATION, OR REPORT WAS PREPARED BY ME OR UNDER MY DIRECT SUPERVISION AND THAT I AM A DULY REGISTERED ENGINEER UNDER THE LAWS OF THE STATE OF MINNESOTA

NAME David L. Mayer
DATE 3/1/00 REG. NO. 18307

ISSUED:

NO.	DESCRIPTION	DATE
	ISSUED FOR BIDS	3-1-00

SHEET TITLE:

Column & P/T Beam Schedules & Details

Scale: As Noted
Project No. 21-2874.00
Drawn By: RJL
Checked By:
Sheet No. S3.1

G:\21-2874.00-Edina 49.5\DRAWINGS\STRUCTURAL\2874-S31.dwg FEB 25, 2000 3:54 p.m. user: dahlinj
Copyright 2000. All rights reserved. No part of this document may be reproduced in any form or by any means without permission from Walker Parking Consultants/Engineers, Inc.

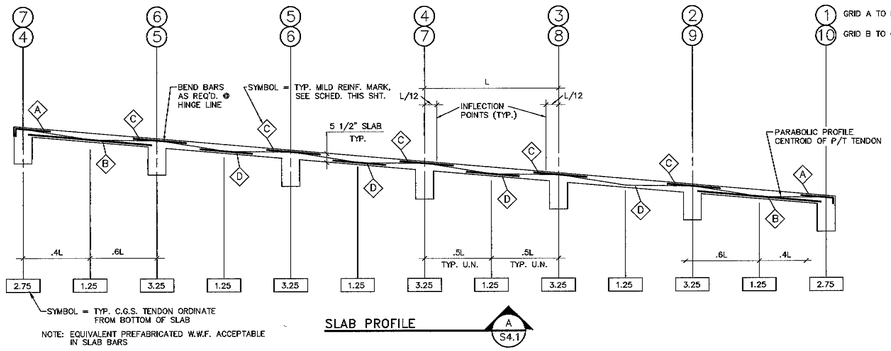

SLAB PROFILE A S4.1

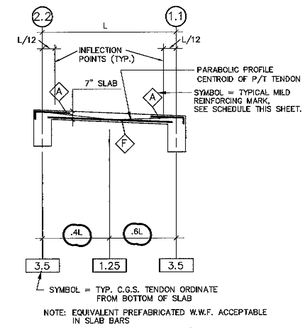

SLAB PROFILE B S4.1

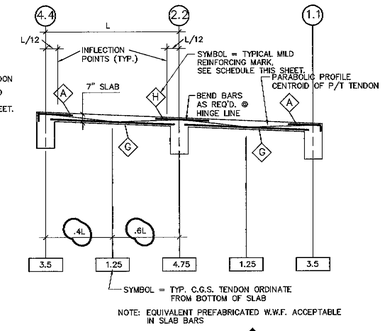

SLAB PROFILE C S4.1

P/T SLAB SCHEDULE

MARK	Fe (Kips/Ft)	REMARKS	MARK	Fe (Kips/Ft)	REMARKS
S1	17.7		S4	26.5	
S2	2				
S3	20				

NOTE: Fe = Effective Post-Tension Force After All Losses
Temperature Tendon Fe = 26.5 Kips/Strand
For Additional Reinforcing, See Sheet

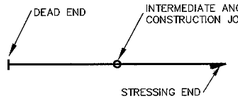

P/T SLAB TENDON KEY

SLAB NOTES:
1. LOCATION OF STRANDS BASED ON 1/2"ϕ STRAND.
2. TEMPERATURE TENDONS PLACED ON TOP PF MAIN SLAB TENDONS AND AT MID-DEPTH OF SLAB AT ANCHORS. SEE PLANS FOR TEMPERATURE TENDON LOCATIONS.
3. USE 2 - #4 x CONTINUOUS (EPOXY COATED) AT ALL P/T ANCHORS.
4. MINIMUM COVER ON P/T ANCHORS = 1 1/2".
5. SEE GENERAL NOTE III F FOR EPOXY COATING REQUIREMENTS.
6. APPLY TRAFFIC TOPPING OVER P/T ANCHOR POCKETS 6" x 6" ABOVE GRID B ONLY.
7. PROVIDE 2 - #4 AT EACH P/T BEAM ANCHOR IN SLAB.

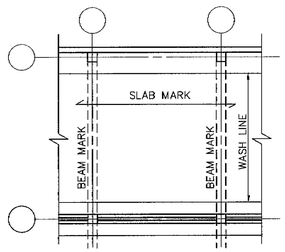

TYPICAL BAY KEY 1 S4.1

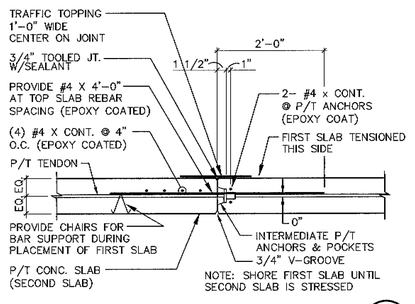

SLAB CONNECTION DETAIL 2 S4.1
JOINT PERPENDICULAR TO SLAB SPAN

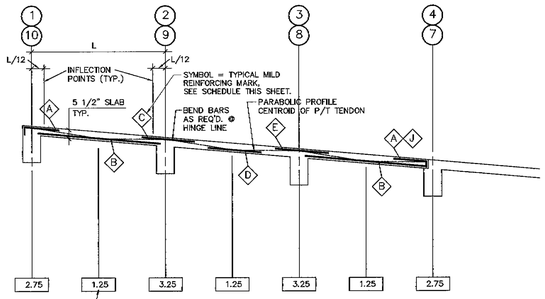

SLAB PROFILE D S4.1

MILD REINFORCEMENT SCHEDULE

MARK	SIZE & SPACING
A	#4 @ 16" x 6'-0" W/STD. HOOK
B	#4 @ 12" x SPAN LENGTH
C	#4 @ 12" x 12'-0"
D	#4 @ 16" x 17'-6"
E	#4 @ 12" x 17'-6"
F	#5 @ 10" x SPAN LENGTH
G	#5 @ 16" x SPAN LENGTH
H	#5 @ 12" x 13'-0"
J	#4 @ 12" x 5'-0" W/MECH. COUPLER - SEE DETAIL 4/S4.1

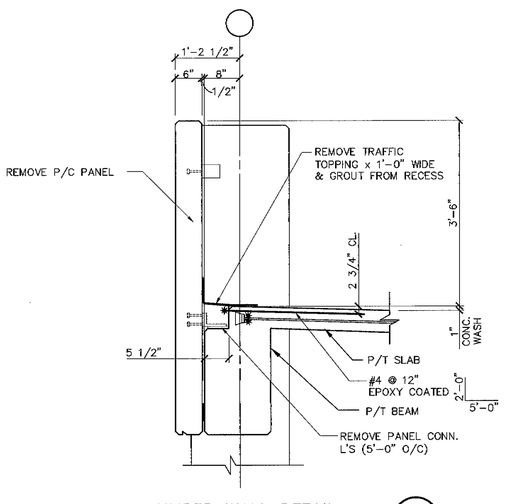

EXISTING BUMPER WALL DETAIL 3 S4.1

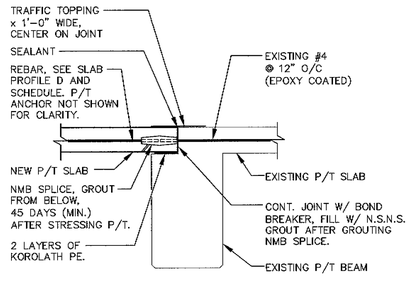

SLAB CONNECTION DETAIL 4 S4.1

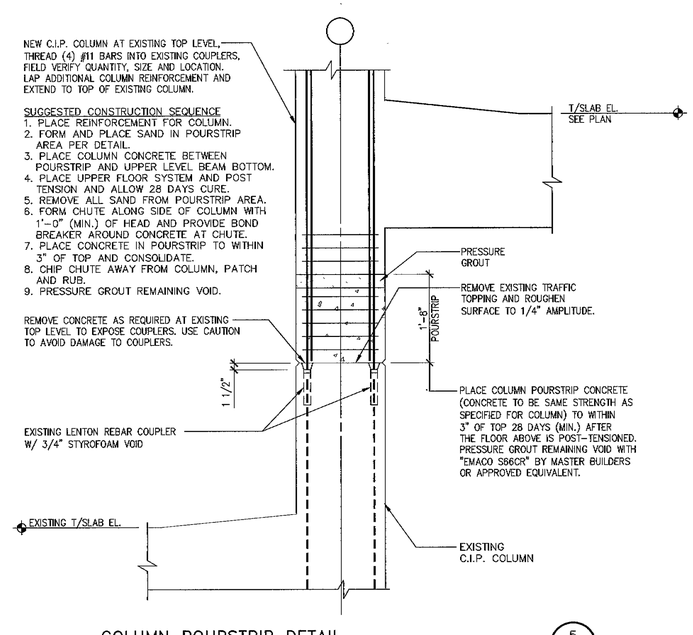

COLUMN POURSTRIP DETAIL 5 S4.1

BUILDING DEPARTMENT
MAR 01 2000
CITY OF EDINA

WALKER PARKING CONSULTANTS
5775 Wayzata Boulevard
Suite 425
Minneapolis, MN 55416
612.595.9116 Ph.
612.595.9518 Fax

EDINA 49 1/2 NORTH
PARKING FACILITY ADDITION
EDINA MINNESOTA

SEAL

I HEREBY CERTIFY THAT THIS PLAN, SPECIFICATION, OR REPORT WAS PREPARED BY ME OR UNDER MY DIRECT SUPERVISION AND THAT I AM A DULY REGISTERED ENGINEER UNDER THE LAWS OF THE STATE OF MINNESOTA.

NAME Dean L Mapp
DATE 3/1/00 REG. NO. 18307

ISSUED:

NO.	DESCRIPTION	DATE
	ISSUED FOR BIDS	3-1-00

SHEET TITLE:
P/T Slab Profiles & Details

Scale: As Noted
Project No. 21-2874.00
Drawn By: RJL
Checked By:
Sheet No.
S4.1

© Copyright 2000. All rights reserved. No part of this document may be reproduced in any form or by any means without permission from Walker Parking Consultants/Engineers, Inc.

G:\21-2874.00-Edina 49.5\DRAWINGS\STRUCTURAL\2874-S41.dwg FEB 25, 2000 3:55 p.m. user: dahlinj

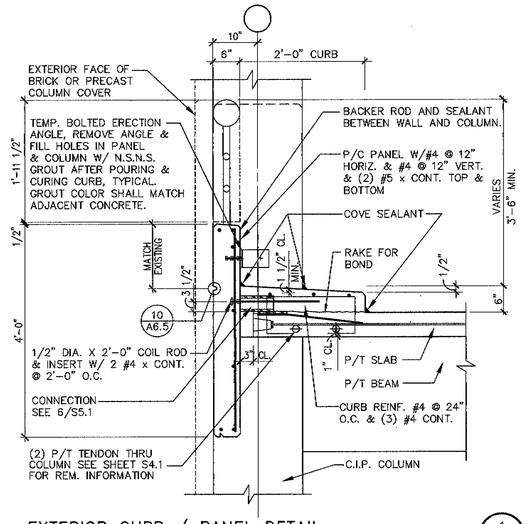

EXTERIOR CURB / PANEL DETAIL — 1 / S5.1

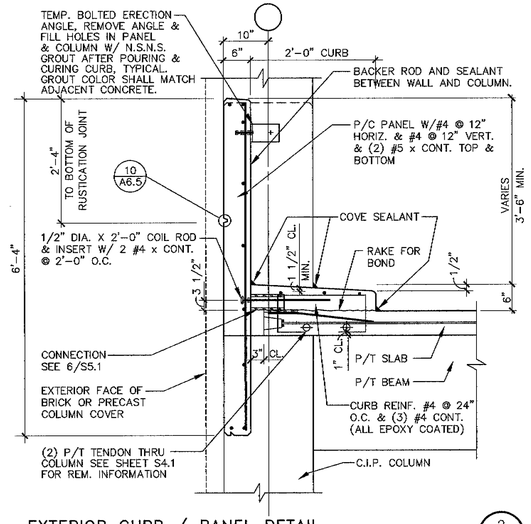

EXTERIOR CURB / PANEL DETAIL — 2 / S5.1

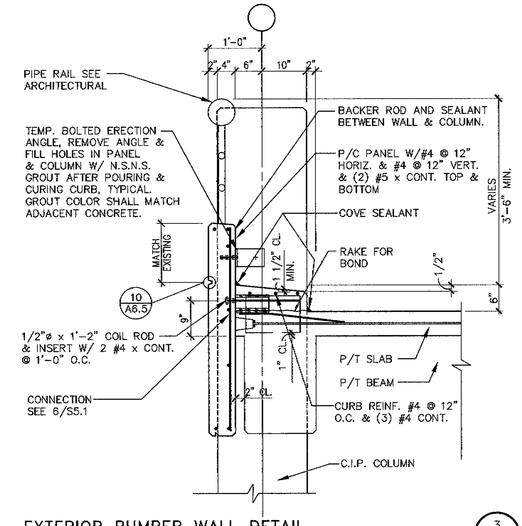

EXTERIOR BUMPER WALL DETAIL — 3 / S5.1

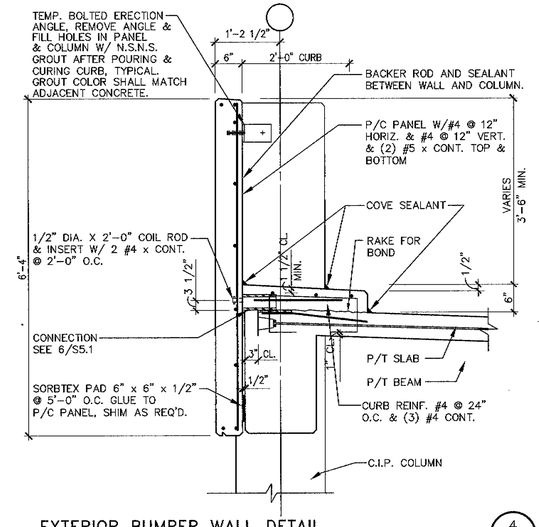

EXTERIOR BUMPER WALL DETAIL — 4 / S5.1

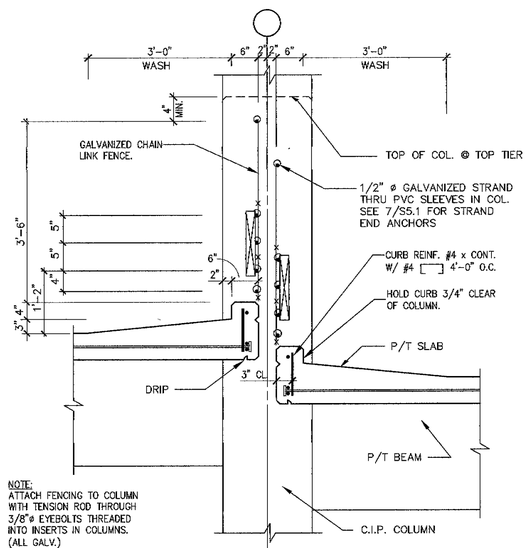

NOTE:
ATTACH FENCING TO COLUMN WITH TENSION ROD THROUGH 3/8"ø EYEBOLTS THREADED INTO INSERTS IN COLUMNS. (ALL GALV.)

INTERIOR SLAB/WASH DETAIL — 5 / S5.1

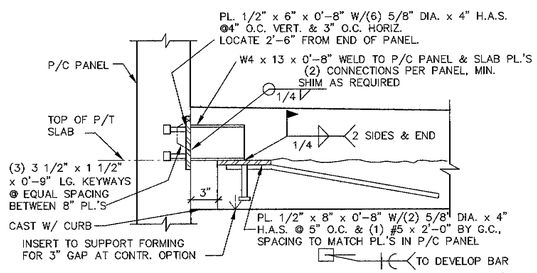

P/C PANEL CONNECTION DETAIL AT CURB — 6 / S5.1

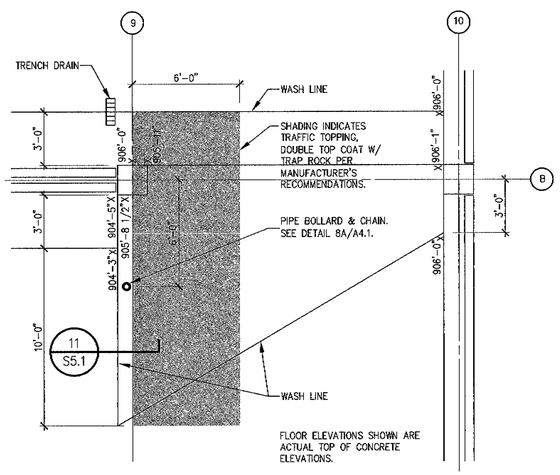

END CROSSOVER PLAN — 8 / S5.1

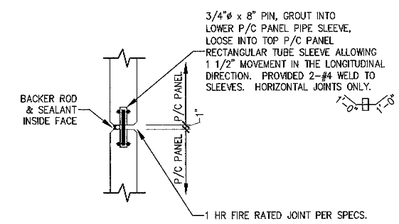

PANEL / PANEL DETAIL — 9 / S5.1

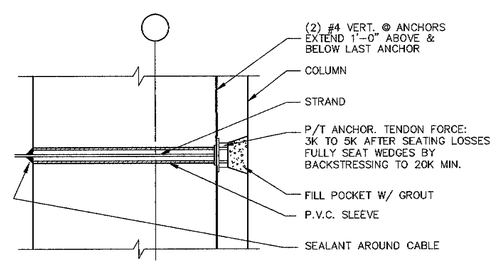

STRAND END ANCHOR DETAIL — 7 / S5.1

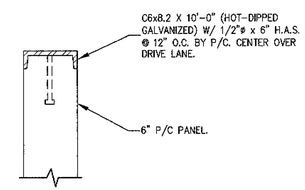

SNOW GUARD DETAIL — 10 / S5.1

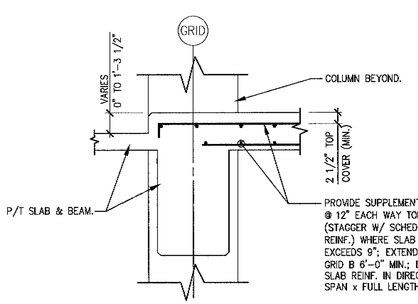

END CROSSOVER SECTION — 11 / S5.1

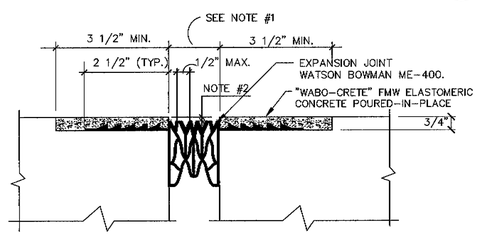

NOTE #1
OPENING WIDTH: SUBMIT CASTING WIDTH CALCULATIONS TO ENGINEER FOR REVIEW: ACCOUNT FOR VOLUME CHANGE OF P/T CONCRETE, CLIMATE CONDITIONS, TIMING OF CONCRETE PLACEMENT AND EXPANSION JOINT INSTALLATION.

NOTE #2
MAX. VERTICAL RECESS 1/4" + 1/4" WITH 1 TO 2 CHAMFER.

EXPANSION JOINT DETAIL — 12 / S5.1

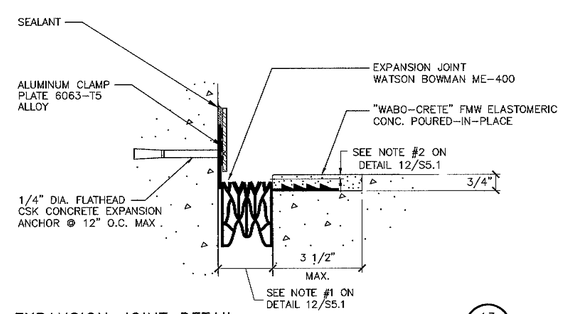

EXPANSION JOINT DETAIL — 13 / S5.1

G:\21-2874.00-Edina 49.5\DRAWINGS\STRUCTURAL\2874-S51.dwg FEB 25, 2000 3:58 p.m. user: dahlinj

Copyright 2000. All rights reserved. No part of this document may be reproduced in any form or by any means without permission from Walker Parking Consultants/Engineers, Inc.

WALKER PARKING CONSULTANTS
5775 Wayzata Boulevard
Suite 425
Minneapolis, MN 55416
612.595.9116 Ph.
612.595.9518 Fax

EDINA 49 1/2 NORTH PARKING FACILITY ADDITION

EDINA MINNESOTA

SEAL

I HEREBY CERTIFY THAT THIS PLAN, SPECIFICATION, OR REPORT WAS PREPARED BY ME OR UNDER MY DIRECT SUPERVISION AND THAT I AM A DULY REGISTERED ENGINEER UNDER THE LAWS OF THE STATE OF MINNESOTA

NAME Dana L. Mayo
DATE 3/1/00 REG. NO. 18307

ISSUED:

NO.	DESCRIPTION	DATE
	ISSUED FOR BIDS	3-1-00

SHEET TITLE:

Structural Details

BUILDING DEPARTMENT MAR 01 2000 CITY OF EDINA

Scale: As Noted
Project No. 21-2874.00
Drawn By: RJL
Checked By:
Sheet No.

S5.1