A61
ONLY

AC2

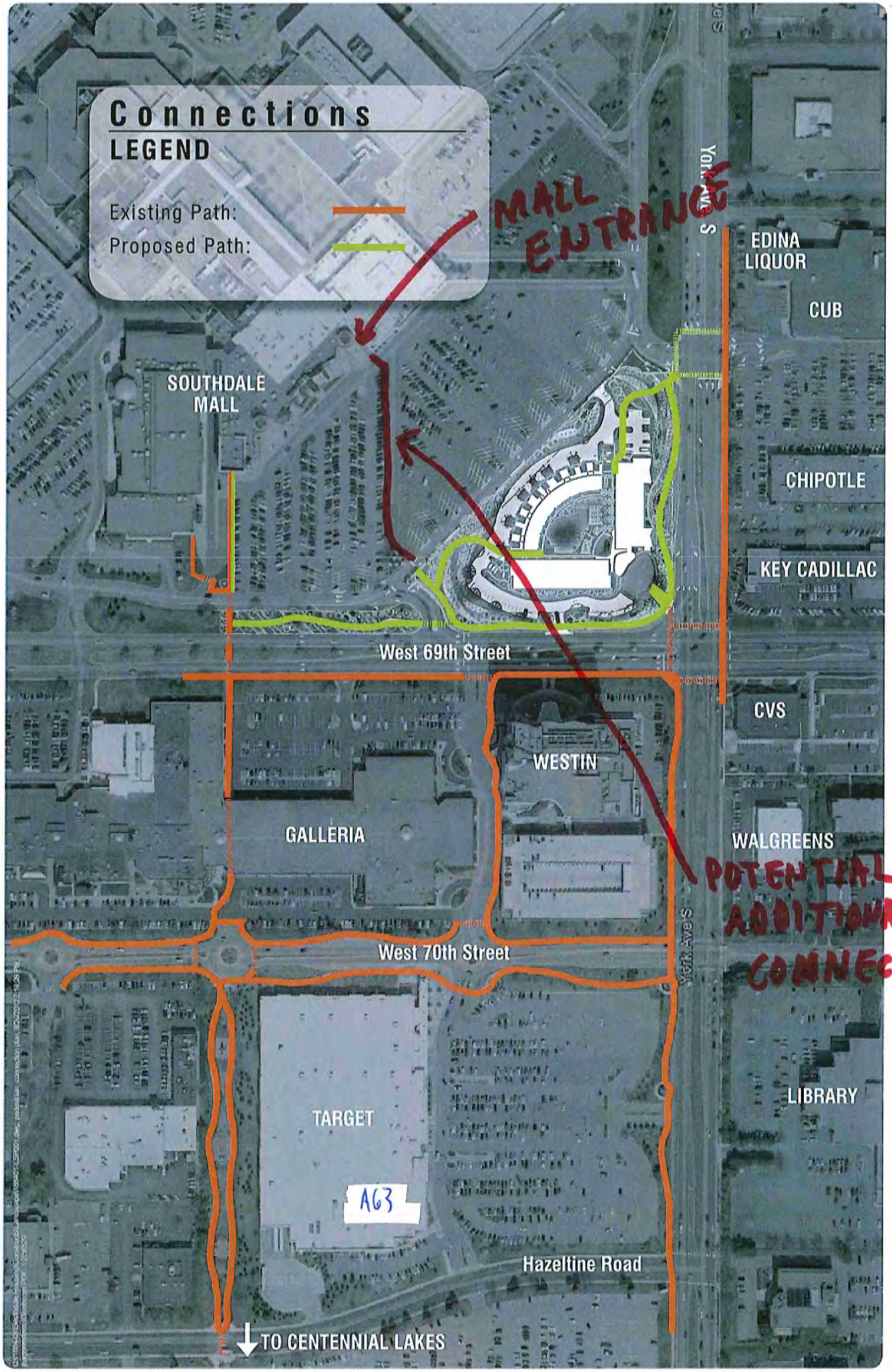
Connections
LEGEND
Existing Path:
Proposed Path:
MALL ENTRANCE
York Ave S
EDINA LIQUOR
CUB
SOUTHDALE MALL
CHIPOTLE
KEY CADILLAC
West 69th Street
CVS
WESTIN
GALLERIA
WALGREENS
POTENTIAL ADDITIONAL CONNECTION
West 70th Street
York Ave S
LIBRARY
TARGET
A63
Hazeltine Road
TO CENTENNIAL LAKES

A64

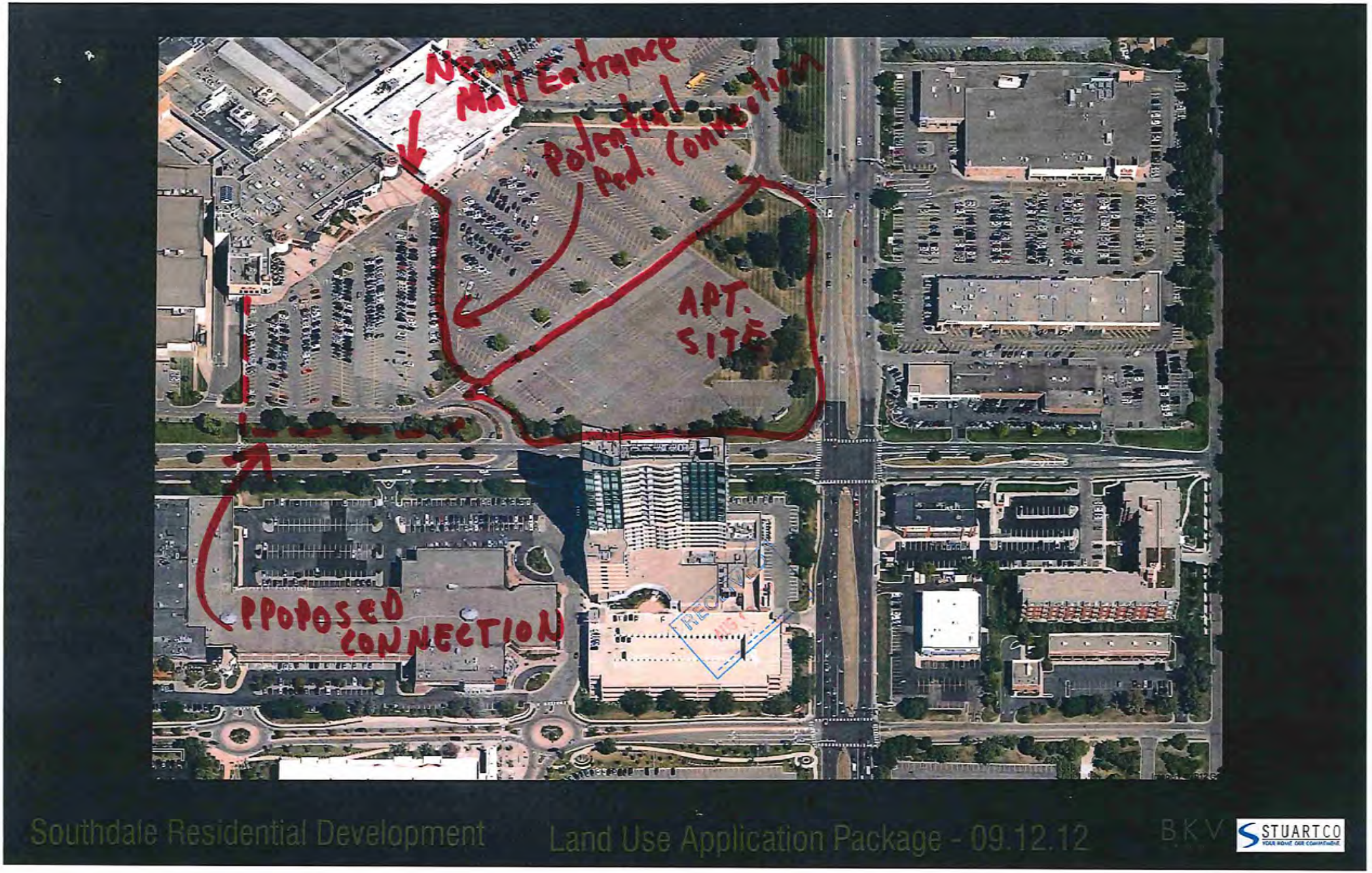

Southdale Residential Development Land Use Application Package - 09.12.12 B.K.V STUARTCO YOUR HOME, OUR COMMITMENT

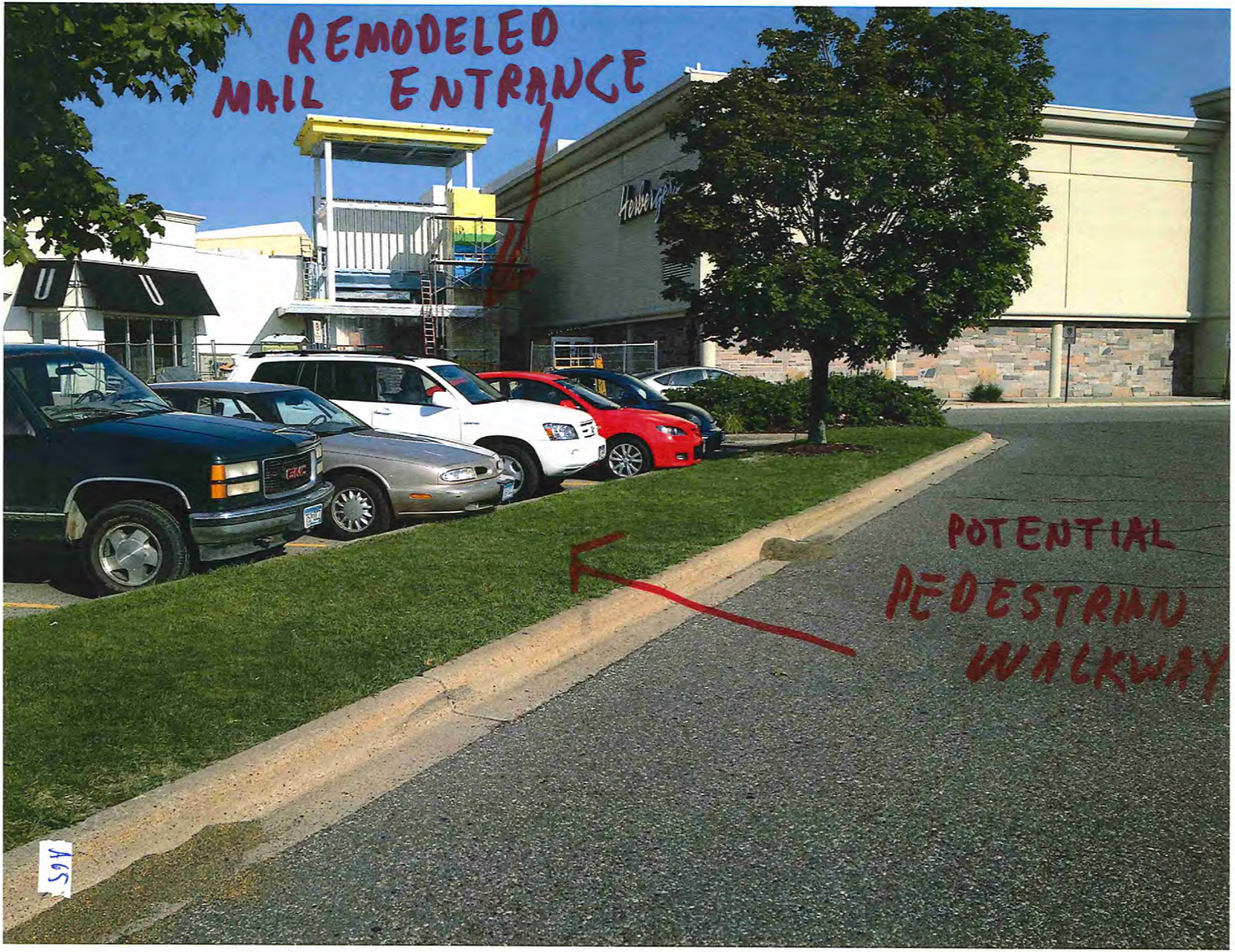
REMODELED
MAIL ENTRANCE
POTENTIAL
PEDESTRIAN
WALKWAY
A6S

POTENTIAL
PEDESTRIAN
WALK
EXPAND
CURB

WSB & Associates, Inc.

Infrastructure ■ Engineering ■ Planning ■ Construction

701 Xenia Avenue South
Suite #300
Minneapolis, MN 55416
Tel: 763 541-4800
Fax: 763 541-1700

Memorandum

DATE: *September 4, 2012*

TO: *Mr. Cary Teague, Planning Director*
Mr. Wayne Houle, Director of Engineering
City of Edina

FROM: *Charles Rickart, P.E., PTOE*

RE: *Southdale Residential*
Traffic and Parking Study
City of Edina, MN
WSB Project No. 1686-34

Background

The purpose of this study is to determine the potential traffic and parking impacts the proposed addition of the Southdale Residential apartments would have on the existing Southdale Shopping Center parking, site circulation and the adjacent roadway system. The site is located in the northwest quadrant of 69th Street and York Avenue. The project location is shown on **Figure 1**.

The proposed plan includes the addition of 232 apartment units with associated parking in the existing Southdale Shopping Center parking lot. Existing access to this area of the Southdale Shopping Center is through two existing ¾ movement intersections and one right-in only intersection on 69th Street and one site entrance and one site exit intersection on York Avenue. The Southdale Residential project is proposing to modify the access on 69th Street adding a right-out at the location of the current right-in access, and modifying the existing south exit driveway on York Avenue to a full movement intersection. The proposed site plan is shown on **Figure 2**.

The traffic impacts of the existing and proposed development were evaluated at the following locations.

- York Avenue and 66th Street
- York Avenue and Southdale site entrance and exit intersections
- York Avenue and 69th Street
- 69th Street and Southdale site right in only driveway
- 69th Street and Southdale site east and west entrance intersections
- 69th Street and France Avenue
- Southdale site ring road and Southdale access driveway from 69th Street
- Southdale site ring road and Southdale access exit driveway to York Avenue

The following sections of this report document the analysis and anticipated impacts of the proposed redevelopment.

Existing Traffic Characteristics

The existing lane configuration and traffic control include:

York Avenue (CSAH 31) is north/south a 4-lane divided "B" Minor Arterial roadway. Primary access to York Avenue is by local streets and development driveways. The posted speed limit in the vicinity of the site is 30 mph.

69th Street is an east/west City 4-lane divided collector roadway. Access to adjacent developments including the Southdale Shopping Center and the Galleria is provided from this roadway. The speed limit posted on 69th Street is 30 mph.

The lane configurations at each of the study area intersection are as follows:

York Avenue at 66th Street - Traffic Signal control
- SB York Ave approaching 66th St – one free right, two through, one left
- NB York Ave approaching 66th St – one free right, two through, two left
- EB 66th St approaching York Ave – one free right, two through, two left
- WB 66th St approaching York Ave – one free right, two through, two left

York Avenue at Southdale Site Entrance – Sidestreet Stop Sign control
- SB York Ave approaching Site Entrance – one right, two through
- NB York Ave approaching Site Entrance – one continuous right, two through, one left
- WB Development Driveway approaching York Ave – one right out only

York Avenue at Southdale Site Exit – Traffic Signal control
- SB York Ave approaching Site Entrance – two through, one left
- NB York Ave approaching Site Entrance – one right, two through
- EB Site Entrance approaching York Ave – one right/through, two left
- WB Development Driveway approaching York Ave – one right, two left

York Avenue at 69th Street – Traffic Signal contro
- SB York Ave approaching 69th St – one through/right, three through, one left
- NB York Ave approaching 69th St – one right, three through, one left
- EB 69th St approaching York Ave – one through/right, one left
- WB 69th St approaching York Ave – one right, one through, one left

69th Street at Southdale Right-In Only – No Traffic control
- EB 69th St approaching Site Access – one through/right, one through

69th Street at East Southdale / Galleria Site Access – Sidestreet Stop Sign control
- EB 69th St approaching Site Access – one through/right, one through, one left
- WB 69th St approaching Site Access – one through/right, one through, one left
- SB Southdale Access approaching 69th St – one right only
- NB Galleria Access approaching 69th St - one right only

69th Street at West Southdale / Galleria Site Access – Sidestreet Stop Sign control
EB 69th St approaching Site Access – one through/right, one through
WB 69th St approaching Site Access – one through/right, one through, one left
SB Southdale Access approaching 69th St – one right, one through/left
NB Galleria Access approaching 69th St – one right/through/left

69th Street at France Avenue – Traffic Signal control
EB 69th St approaching France Ave – one right, two through, one left
WB 69th St approaching France Ave – one free right, two through, one left
SB France Ave approaching 69th St – one free right, three through, one left
NB France Ave approaching 69th St – one free right, three through, one left

PM peak hour and Saturday peak hour turning movement counts and daily hourly approach counts were conducted during the weeks on July 8th – 21st, 2012. AM peak hour counts were previously conducted by Hennepin County at the intersections along France Avenue. The AM peak hour counts were found to be 20% to 25% lower than the PM peak or Saturday peak counts. Therefore, only the PM and Saturday peak hours were analyzed with this study. These counts were used as the existing baseline conditions for the area.

Figure 3 shows the existing intersections and driveways along each corridor that were analyzed as part of this traffic study. **Figure 4** shows the existing 2012 PM peak hour and Saturday peak hour traffic volumes. The traffic count data is included in the ***Appendix***.

Background (Non Development) Traffic Growth

Traffic growth in the vicinity of a proposed site will occur between existing conditions (2012) and any given future year due to other development within the region. This background growth must be accounted for and included in future year traffic forecasts. Reviewing the historical traffic counts in the area, traffic has stayed somewhat constant or dropped in the past few years. However, in order to account for some background growth in traffic the Hennepin County State Aid traffic growth projection factor of 1.1 over a 20 year period was used to project traffic to the 2014 and 2030 analysis years.

In addition to the regional background traffic, other specific none development related traffic was determined and included with the overall background traffic.

Additional Southdale Mall Development - Based on the information received from Southdale Center about the current vacancy rates and plans for renovations, it was determined that following the renovations, the mall would have and additional 143,880 sf of leasable space available. This figure includes leasable retail and food court space. The analysis assumes that all leasable space occupied by 2014 and that the background trip generation for the mall property was the same for the 2014 and 2030 analysis.

Future Restaurant Development – A future restaurant is proposed in northeast quadrant of France Avenue and 69th Street in the Southdale Center Parking lot. The restaurant was assumed to be 8,000 sf in size with approximately 300 seats. The analysis assumes the restaurant will be developed by 2014 and that the background trip generation for the restaurant will be the same for the 2014 and 2030 analysis scenarios.

The estimated trip generation for the additional background traffic is shown below in ***Table 1.*** The trip generation rates used to estimate the additional site traffic are based on extensive surveys of the trip-generation rates for other similar land uses as documented in the Institute of Transportation Engineers *Trip Generation Manual, 8th* Edition. The table shows the PM peak hour and Saturday peak hour trip generation for the proposed uses.

Table 1 - Estimated Additional Background Trip Generation

Use	Size (sf)	PM Peak Hour			Saturday Peak Hour		
		Total	In	Out	Total	In	Out
Shopping Center	143,880	537	263	274	704	366	338
Restaurant	8000	90	53	37	113	60	53
Total New Trips		**627**	**316**	**311**	**817**	**426**	**391**

Source: Institute of Transportation Engineers Trip Generation Manual, 8th Edition

Development Site Trip Generation

The estimated trip generation from the proposed Southdale Residential project is shown below in ***Table 2.*** The trip generation used to estimate the proposed site traffic is also based on rates for other similar land uses as documented in the Institute of Transportation Engineers *Trip Generation Manual, 8th* Edition. The table shows the PM peak hour and Saturday peak hour trip generation for the proposed development.

In addition, it was assumed that all the traffic from the site would be new and that no adjustments were made for dual purpose or pass-by/diverted trips. This also will provide for a worst case traffic condition.

Table 2 - Estimated Development Site Trip Generation

Use	Size (units)	PM Peak Hour			Saturday Peak Hour		
		Total	In	Out	Total	In	Out
Apartments	232	82	50	32	93	53	40

Source: Institute of Transportation Engineers Trip Generation Manual, 8th Edition

Trip Distribution

Site-generated trips were distributed to the adjacent roadway system based on several factors including the existing Annual Average Daily Traffic (AADT) and the travel sheds for the major routes that serve it. In general the Trip Distribution was assumed, 30% to the north, 40% to the south, 15% to the east and 15% to the west.

Additional Southdale Center background trips were distributed to 66th Street, 69th Street, York Avenue, or France Avenue based on the ratio of existing AADT volumes on each respective roadway. Where one of the adjacent roadways had multiple entries or exits into the mall property, entering or exiting volumes were evenly split across both locations.

The generated trips for the future restaurant development were assumed to arrive or exit using driveways on France Avenue or 69th Street, and were assigned based on the ratio of existing AADT volumes on each respective roadway.

The generated trips for the proposed Southdale Residential development were assumed to arrive or exit using driveways on 69th Street or York Avenue, and were assigned based on the ratio of existing AADT volumes on each respective roadway.

Future Year Traffic Forecasts

Traffic forecasts were prepared for the year 2014 which is the year after the proposed site would be fully developed and for the 2030 conditions which represents the City's Comprehensive Plan development time frame. Four improvement alternatives were evaluated.

1. Existing – Assuming existing lane configurations and traffic control

2. No Build – Assuming existing lane configurations and traffic control

3. Build Alternative 1 – Proposed roadway improvements from the development site plan including: a right-in/right-out on 69th Street; full movement access on York Avenue, and; revisions to the Southdale Center circulation roadway adjacent to the development. **Figure 5** shows these improvements.

4. Build Alternative 2 – Proposed roadway improvements including two full movement roundabouts on 69th Street. **Figure 6** shows these improvements.

The traffic forecasts were prepared by adding the projected annual background traffic growth and the projected non-development traffic growth to the existing 2012 traffic counts to determine the "No-Build" traffic conditions. The anticipated Southdale Residential development traffic was then added to the no-build to determine the "Build" traffic conditions. ***Figures 7 – 12*** shows the projected 2014 and 2030 No-Build and Build PM peak hour and Saturday peak hour traffic volumes.

Traffic Operations

Existing and/or forecasted traffic operations were evaluated for the intersections and access point on 69th Street and York Avenue. The analysis was conducted for the following scenarios.

1. Existing 2012 Conditions
2. Projected 2014 No Build
3. Projected 2014 Build Alternative 1
4. Projected 2014 Build Alternative 2
5. Projected 2030 No Build
6. Projected 2030 Build Alternative 1
7. Projected 2030 Build Alternative 2

This section describes the methodology used to assess the operations and provides a summary of traffic operations for each scenario.

Analysis Methodology

The traffic operations analysis is derived from established methodologies documented in the *Highway Capacity Manual 2000* (HCM). The HCM provides a series of analysis techniques that are used to evaluate traffic operations.

Intersections are given a Level of Service (LOS) grade from "A" to "F" to describe the average amount of control delay per vehicle as defined in the HCM. The LOS is primarily a function of peak traffic hour turning movement volumes, intersection lane configuration, and the traffic controls at the intersection. LOS A is the best traffic operating condition, and drivers experience minimal delay at an intersection operating at that level. LOS E represents the condition where the intersection is at capacity, and some drivers may have to wait through more than one green phase to make it through an intersection controlled by traffic signals. LOS F represents a condition where there is more traffic than can be handled by the intersection, and many vehicle operators may have to wait through more than one green phase to make it through the intersection. At a stop sign-controlled intersection, LOS F would be characterized by exceptionally long vehicle queues on each approach at an all-way stop, or long queues and/or great difficulty in finding an acceptable gap for drivers on the minor legs at a through-street intersection.

The LOS ranges for both signalized and un-signalized intersections are shown in ***Table 3***. The threshold LOS values for un-signalized intersections are slightly less than for signalized intersections. This variance was instituted because drivers' expectations at intersections differ with the type of traffic control. A given LOS can be altered by increasing (or decreasing) the number of lanes, changing traffic control arrangements, adjusting the timing at signalized intersections, or other lesser geometric improvements. LOS also changes as traffic volumes increase or decrease.

Table 3 - Intersection Level of Service Ranges

	Control Delay (Seconds)	
	Signalized	**Un-Signalized**
A	≤ 10	≤ 10
B	10 – 20	10 – 15
C	20 – 35	15 – 25
D	35 – 55	25 – 35
E	55 – 80	35 – 50
F	> 80	> 50

Source: HCM

LOS, as described above, can also be determined for the individual legs (sometimes referred to as "approaches") or lanes (turn lanes in particular) of an intersection. It should be noted that a LOS E or F might be acceptable or justified in those cases where a leg(s) or lane(s) has a very low traffic volume as compared to the volume on the other legs. For example, improving LOS on such low-volume legs by converting a two-way stop condition to an all-way stop, or adjusting timing at a signalized intersection, could result in a significant penalty for the many drivers on the major road while benefiting the few on the minor road. Also, geometric improvements on minor legs, such as additional lanes or longer turn lanes, could have limited positive effects and might be prohibitive in terms of benefit to cost.

Although LOS A represents the best possible level of traffic flow, the cost to construct roadways and intersection to such a high standard often exceeds the benefit to the user. Funding availability might also lead to acceptance of intersection or roadway designs with a lower LOS. LOS D is generally accepted as the lowest acceptable level in urban areas. LOS C is often considered to be the desirable minimum level for rural areas. LOS D or E may be acceptable for limited durations or distances, or for very low-volume legs of some intersections.

The LOS analysis was performed using Synchro/SimTraffic:

- Synchro, a software package that implements Highway Capacity Manual (HCM) methodologies, was used to build each signalized intersection and provide an input database for turning-movement volumes, lane geometrics, and signal design and timing characteristics. In addition, Synchro was used to optimize signal timing parameters for future conditions. Output from Synchro is transferred to SimTraffic, the traffic simulation model.

- SimTraffic is a micro-simulation computer modeling software that simulates each individual vehicle's characteristics and driver behavior in response to traffic volumes, intersection configuration, and signal operations. The model simulates drivers' behaviors and responses to surrounding traffic flow as well as different vehicle types and speeds. It outputs estimated vehicle delay and queue lengths at each intersection being analyzed.

Existing Level of Service Summary

Table 4, below, summarizes the existing LOS at the primary intersections in the study area based on the current lane geometry, traffic control and traffic volumes. The table shows that all intersection are operating at an overall LOS D or better during both the weekday PM and Saturday peak hours with all movements operating at LOS E or better. A table showing the LOS and delays by approach is included in the ***Appendix***.

Table 4 - Existing Level of Service

Intersection	PM Peak Hour		Saturday Peak Hour	
	LOS	Delay (sec/veh)	LOS	Delay (sec/veh)
York Ave at 66th St	D (E)	38	C (E)	27
York Ave at Southdale Entrance	A (B)	4	A (A)	4
York Ave at Southdale Exit	C (E)	22	B (D)	19
York Ave at 69th St	C (E)	32	C (E)	29
69th St at Southdale Right-In	A (A)	2	A (A)	2
69th St at Southdale East Access	A (A)	2	A (A)	3
69th St at Southdale West Access	A (C)	5	A (D)	7
69th St at France Ave	C (E)	30	C (E)	26
Mall Circulation Rd at (69th St) East Access	A (A)	3	A (A)	2
Mall Circulation Rd at Park n Ride	A (A)	1	A (A)	1
Mall Circulation Rd at (York Ave) South Access	A (A)	1	A (A)	1

C = Overall LOS, (D) = Worst movement LOS Source: WSB & Associates, Inc.

Forecast Traffic Operations

A capacity and LOS analysis was completed for the study area intersections for 2014 which is the year after the proposed Southdale Residential site would be fully developed and for the 2030 conditions which represents the City's Comprehensive Plan development time frame. The results of the analysis are discussed below and shown in ***Tables 5 - 7***. Detailed tables showing the LOS and delays by approach are included in the ***Appendix***.

Table 5 – No Build, shows that all intersection will continue to operate at overall LOS D or better in 2014 and 2030 during both the weekday PM and Saturday peak hours. However, with the increase in traffic, some additional movements will be operating at LOS E. Overall delays will also increase slightly from the existing conditions to the 2030 conditions, especially at the major intersections at 66th Street and York Avenue, York Avenue and 69th Street and 69th Street at France Avenue.

Table 5 – No Build Level of Service

Intersection	2014				2030			
	PM Peak Hour		Saturday Peak Hour		PM Peak Hour		Saturday Peak Hour	
	LOS	Delay (sec/veh)	LOS	Delay (sec/veh)	LOS	Delay (sec/veh)	LOS	Delay (sec/veh)
York Ave at 66th St	D (E)	38	C (E)	32	D (E)	43	C (E)	33
York Ave at Southdale Entrance	A (B)	4	A (B)	5	A (B)	4	A (B)	5
York Ave at Southdale Exit	C (E)	22	C (E)	29	C (E)	22	C (E)	30
York Ave at 69th St	D (E)	36	D (E)	38	D (E)	38	D (E)	40
69th St at Southdale Right-In	A (A)	2	A (A)	2	A (A)	2	A (A)	2
69th St at Southdale East Access	A (A)	3	A (A)	3	A (A)	3	A (A)	3
69th St at Southdale West Access	A (C)	6	A (E)	10	A (D)	6	B (E)	10
69th St at France Ave	C (E)	30	C (E)	29	C (E)	31	C (E)	30
Mall Circulation Rd at (69th St) East Access	A (A)	3	A (A)	2	A (A)	3	A (A)	2
Mall Circulation Rd at Park n Ride	A (A)	1	A (A)	1	A (A)	1	A (A)	1
Mall Circulation Rd at (York Ave) South Access	A (A)	1	A (A)	2	A (A)	1	A (A)	2

C = Overall LOS, (D) = Worst movement LOS Source: WSB & Associates, Inc.

Table 6 – Build Alternative 1, shows that all intersection will continue to operate at overall LOS D or better in 2014 and 2030 during both the weekday PM and Saturday peak hours, except the York Avenue intersection with the revised full movement access to Southdale, which will be operating at an overall LOS E in 2030. All movement will be operating at LOS E or better in 2014 and 2030. Overall LOS and delays do not show any other significant changes from the no-build condition.

At the intersection of 69th Street and the Southdale East access the projected 2014 eastbound left turn volume from 69th Street into the mall is 320 vehicles during the weekday PM peak hour. Although the LOS and delays do not indicate an issue, the rule of thumb for considering additional improvements is 300 vehicles per hour in a left turn lane. Currently there is no eastbound left turn lane provided at the 69th Street and Southdale West access intersection. Adding an eastbound left turn lane at the Southdale West access would distribute the traffic between the two access locations, providing a low cost solution to improve this potential issue.

Table 6 – Build Alternative 1 Level of Service

Intersection	2014				2030			
	PM Peak Hour		Saturday Peak Hour		PM Peak Hour		Saturday Peak Hour	
	LOS	Delay (sec/veh)	LOS	Delay (sec/veh)	LOS	Delay (sec/veh)	LOS	Delay (sec/veh)
York Ave at 66th St	D (E)	38	C (E)	32	D (E)	43	C (E)	33
York Ave at Southdale Entrance	A (B)	5	A (B)	5	A (B)	5	A (C)	7
York Ave at Southdale Full Movement Access	D (E)	43	D (E)	49	D (E)	50	E (E)	58
York Ave at 69th St	D (E)	36	D (E)	38	D (E)	38	D (E)	40
69th St at Southdale Right-In/Right-out	A (A)	2	A (A)	2	A (A)	2	A (A)	2
69th St at Southdale East Access	A (A)	3	A (A)	4	A (A)	3	A (A)	4
69th St at Southdale West Access	A (C)	6	A (E)	9	A (D)	6	A (E)	10
69th St at France Ave	C (E)	30	C (E)	29	C (E)	31	C (E)	30
Mall Circulation Rd at (69th St) East Access	A (A)	3	A (B)	3	A (A)	3	A (B)	3
Mall Circulation Rd at Development Driveway	A (A)	2	A (A)	2	A (A)	2	A (A)	2
Mall Circulation Rd at (York Ave) South Access	B (C)	12	A (D)	13	A (D)	14	C (D)	15

C = Overall LOS, (D) = Worst movement LOS Source: WSB & Associates, Inc.

Table 7 – Build Alternative 2, has similar results as Build Alternative 1 showing that all intersection will continue to operate at overall LOS D or better in 2014 and 2030 during both the weekday PM and Saturday peak hours, except the York Avenue intersection with the revised full movement access to Southdale, which will be operating at an overall LOS E in 2030. All movement will be operating at LOS E or better in 2014 and 2030. Overall LOS and delays do not show any other significant changes from the no- build condition.

Table 7 – Build Alternative 2 Level of Service

Intersection	2014				2030			
	PM Peak Hour		Saturday Peak Hour		PM Peak Hour		Saturday Peak Hour	
	LOS	Delay (sec/veh)	LOS	Delay (sec/veh)	LOS	Delay (sec/veh)	LOS	Delay (sec/veh)
York Ave at 66th St	D (E)	39	C (E)	32	D (E)	43	C (E)	33
York Ave at Southdale Entrance	A (B)	5	A (B)	4	A (B)	5	A (B)	6
York Ave at Southdale Full Movement Access	D (E)	43	D (E)	47	D (E)	50	E (E)	55
York Ave at 69th St	D (E)	36	C (E)	33	D (E)	38	C (E)	34
69th St at Southdale Right-In / Right-Out	A (A)	4	A (C)	4	A (A)	4	A (C)	5
69th St at Southdale East Access - Roundabout	A (A)	6	A (B)	7	A (A)	6	A (B)	7
69th St at Southdale West Access - Roundabout	A (A)	5	A (A)	6	A (A)	5	A (A)	6
69th St at France Ave	D (E)	40	D (E)	35	D (E)	40	D (D)	37
Mall Circulation Rd at (69th St) East Access	A (A)	3	A (A)	3	A (A)	3	A (A)	3
Mall Circulation Rd at Development Driveway	A (A)	2	A (A)	2	A (A)	2	A (A)	2
Mall Circulation Rd at (York Ave) South Access	A (D)	16	A (C)	10	A (D)	16	B (C)	11

C = Overall LOS, (D) = Worst movement LOS Source: WSB & Associates, Inc.

Vehicle Queuing Analysis

A queuing analysis for the existing and future 2014 and 2030 conditions was prepared evaluating the anticipated vehicle queuing impacts at the intersections in the study area. The analysis was conducted using the SimTraffic simulation software.

The results found that during both the weekday PM and Saturday peak hours, for the existing, and future no-build and build 2014 and 2030 conditions, the average queues in the corridors do not exceed any of the available turn lane storage. In some cases however, the maximum queues were exceeded. The maximum queue represents the longest length of queue that was observed during the analysis period. The observations were typically identified one time during the peak periods with an extremely short duration of less than 2 to 4 seconds. In most cases the queues exceed the storage in left or right turn lanes adjacent to a multiple lane roadway (2 or 3 through lanes) therefore not impacting through traffic. Tables showing the average and maximum queue lengths by movement and approach are included in the ***Appendix***.

Parking Impact Analysis

The parking impacts to the existing Southdale Shopping Center site were analyzed based on the proposed changes in uses on the site including: the additional mall area; proposed restaurant outlot, and; proposed Southdale Residential project. ***Table 8*** below shows a summary of each use, the exiting parking provided, parking required based on City Code and the estimated parking needs based on accepted parking generation studies.

Table 8 – Site Parking Summary

Use	Existing Size	Parking from City Code	Proposed Size	Parking from City Code	Parking from ITE
Southdale Retail	1,368,523 sf	6843	1,194,731 sf	5974	5529(1)
Southdale Restaurants	2059 seats	206	1657 seats	166	NA
Southdale Theater	3959 seats	396	3447 seats	345	NA
Restaurant Outlot	NA	0	300 seats	30	105
Apartment Development	NA	0	232 units	232	318
Total Parking Spaces Required		**7445**		**6747**	**5952**
Total Parking Spaces Provided		6686		6442	6442
Parking Variance Required		**759**		**305**	**Not Required**

(1)– Includes mall restaurants and theater area but not the future restaurant outlot (1,328,850 sf)

As indicated in ***Table 8***, the existing parking provided on the Southdale Center site is 6686 spaces with a 759 space parking variance. This variance was approved through City Council resolution (2000-123) in December 2000.

Currently with the planned mall renovation the seating in the Southdale Center restaurants and theater, the sizes are actually reduced from the approved parking resolution. With the proposed changes to the site including the future restaurant outlot and the Southdale Residential project, 6442 total parking spaces would be provided. This includes 6100 spaces on the Southdale Center site and 342 spaces associated with the Southdale Residential project. Based on City Code the site would require 6747total spaces requiring a variance for 305 spaces.

In addition anticipated parking demand for the site was determined. The parking generation rates used to estimate the parking demand was based on surveys of the parking generation for other similar land uses as documented in the Institute of Transportation Engineers *Parking Generation Manual, 4th* Edition. ***Table 8*** shows the results of the parking demand analysis. It should be noted that the parking generation rates used for the Southdale Retail was based on a shopping center use which includes the restaurant and theater uses within the mall. The rates used for both the shopping center and restaurant outlot were for a peak weekend (Friday or Saturday) event in December, which represents a worst case condition. Based on this analysis, only 5952 parking spaces would be needed on the Southdale Center site, which would not require a parking variance.

Conclusions / Recommendation

Based on the analysis documented in this memorandum, WSB has concluded the following:

- The proposed Southdale Residential project includes the addition of 232 apartment units. The site is anticipated to generate 82 trips in the weekday PM peak hour and 93 trips in the Saturday peak hour.

- Additional trips will be generated from vacant and renovated Southdale Center mall space and a proposed new Restaurant outlot. These uses will generate an additional 627 trips in the weekday PM peak hour and 817 trips in the Saturday peak hour.

- Existing traffic operations at the intersections and driveways on York Avenue and 69th Street are operating at overall LOS D or better for the weekday PM peak hour and Saturday peak hour..

- Intersection traffic operations for the No-Build conditions in 2014 and 2030 will continue to operate at an overall LOS D or better for the weekday PM peak hour and Saturday peak hour.

- Two build alternatives were analyzed. Build Alternative 1 included a right-in/right-out on 69th Street and a full movement access from York Avenue to the Southdale site. Build Alternative 2 included roundabouts for the two Southdale site access locations on 69th Street.

- Intersection traffic operations for both Build alternatives in 2014 and 2030 will continue to operate at an overall LOS D or better, except the new full movement access to Southdale Center from York Avenue which would operate at an overall LOS E in 2030.

- The eastbound left turn movement from 69th Street into the mall at the Southdale East access is projected to be 320 vehicles during the weekday PM peak hour in 2014. Providing an eastbound left turn lane at the 69th Street and Southdale West access would be a low cost solution to improve this potential issue.

- The queuing analysis indicates that no significant impact on intersections or access locations will occur as a result of the proposed full build conditions in 2014 or 2030.

- The existing or proposed available parking does not or will not meet the City's Code. A 759 parking space variance is currently in place for the existing Southdale Center site. With the current and proposed changes to the Southdale site, 6747 parking spaces would be required based on City Code. The current plan provides for 6442 parking spaces. This would require a variance for 305 parking spaces.

- Based on ITE parking generation estimates the total parking required for the Southdale Center site is 5952 spaces. With this estimate, no parking variance would be required.

Based on these conclusions the following is recommended.

1. Provide the proposed roadway improvements as shown on the proposed site plan (Build Alternative 1).

2. Construct an eastbound left turn lane at 69th Street and the Southdale West access.

No additional roadway improvements or additional parking would be required to accommodate the proposed Southdale Residential project or future restaurant outlot.

APPENDIX

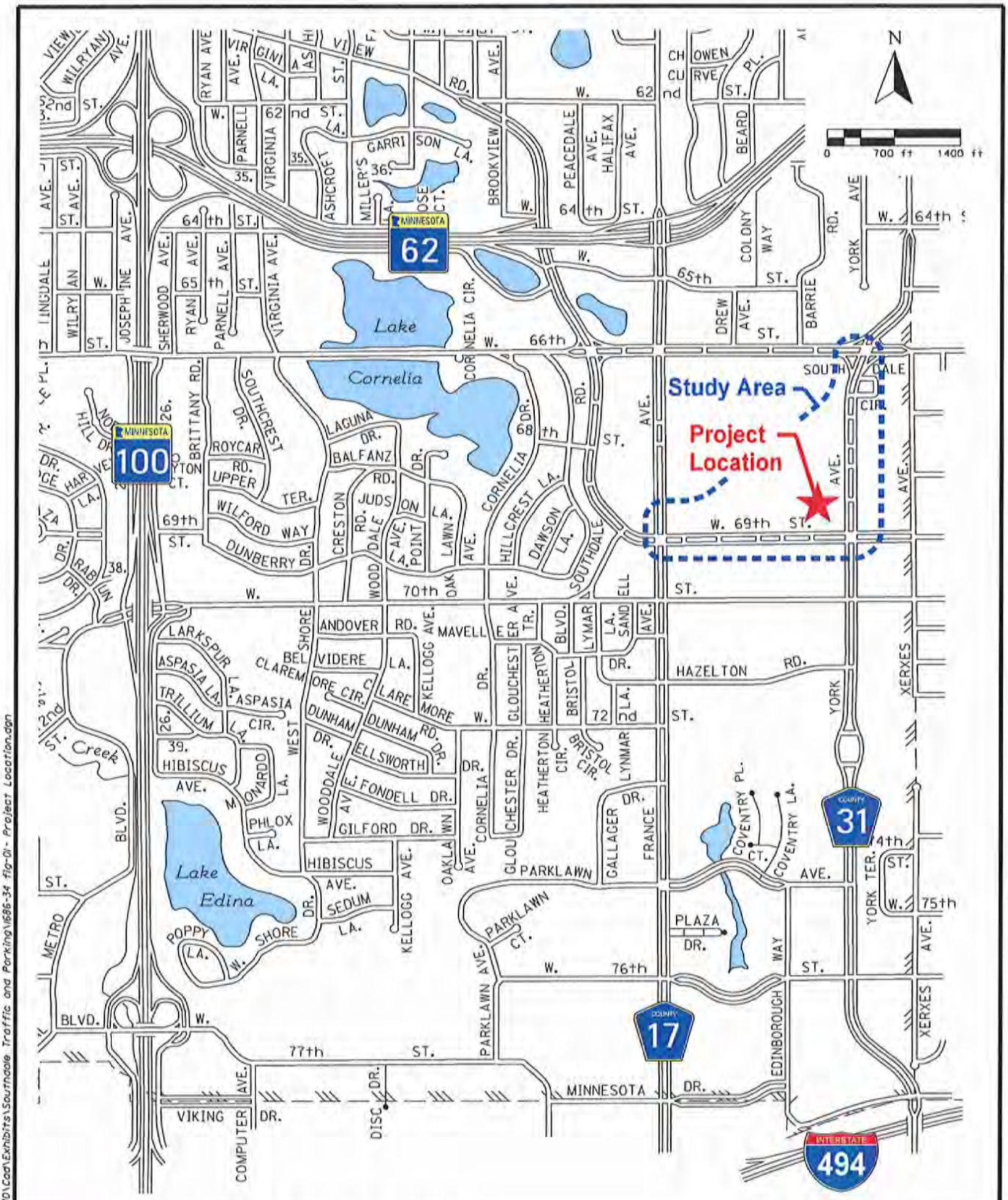

Traffic and Parking Study
Southdale Residential Project
City of Edina, Minnesota

Figure 1
Project Location Map

Date: Printed: 8/29/2002
WSB Filename: K:\01686-340\Cad\Exhibits\Southdale Traffic and Parking\1686-34 fig-01- Project Location.dgn

Date: Printed: 8/29/2012
MSR Filename: K:\01686-340\Cad\Exhibits\Southdale Traffic and Parking\1686-34 fig-02 - Development Site Plan.dgn

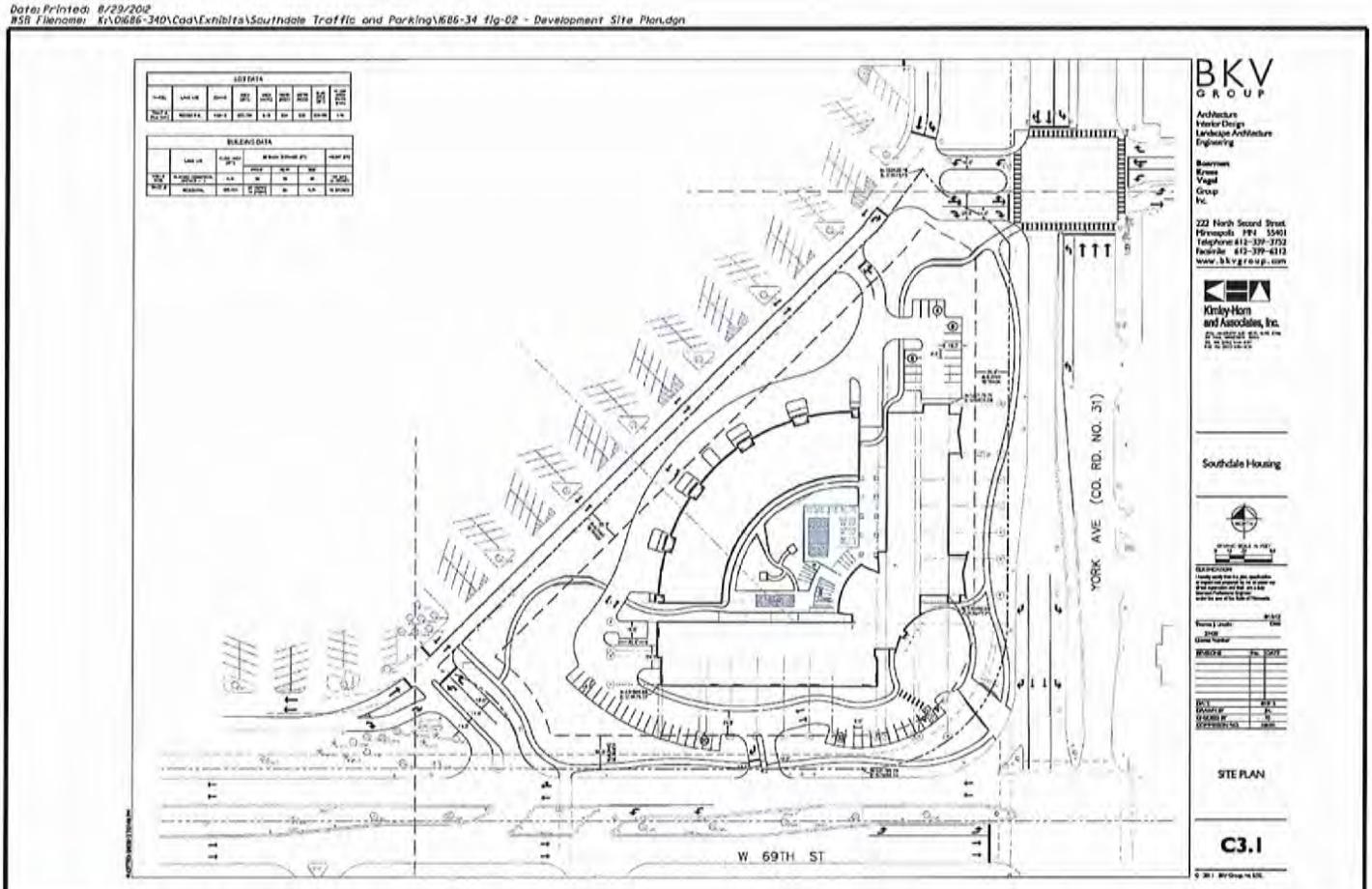

Traffic and Parking Study
Southdale Residential Project
City of Edina, Minnesota

Figure 2
Development Site Plan

Date: Printed: 8/29/2012
WSB Filename: K:\01686-340\Cad\Exhibits\Southdale Traffic and Parking\1686-34 fig-03 - Southdale Development Plan.dgn

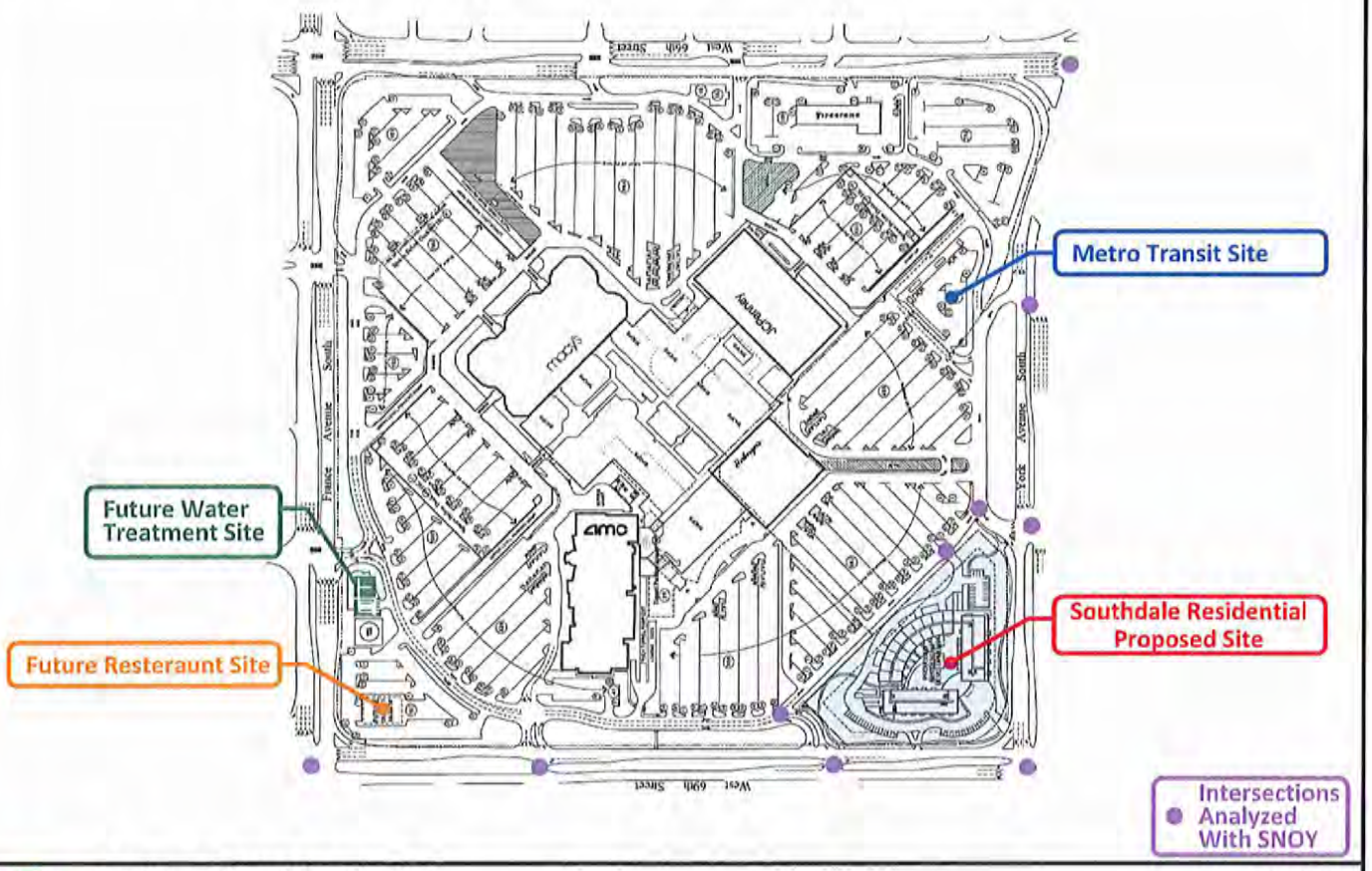

Traffic and Parking Study
Southdale Residential Project
City of Edina, Minnesota

Figure 3

Southdale Development Plan

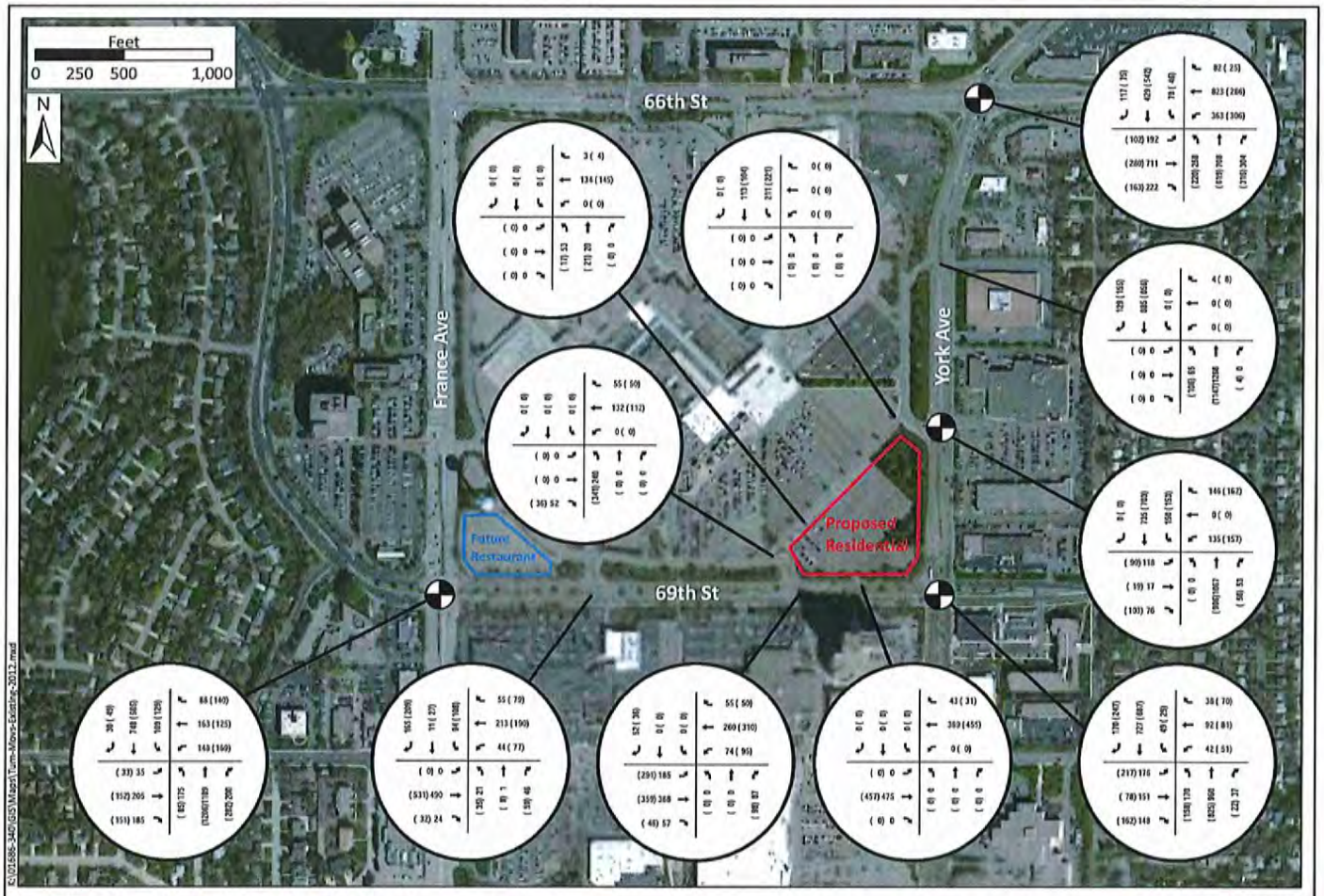

Traffic and Parking Study
Southdale Residential Project
City of Edina

PM (SAT)

Figure 4
EXISTING 2012
Peak Hour Turning Movement Volumes

Traffic and Parking Study
Southdale Residential Project
City of Edina, Minnesota

Figure 5
Build Alternate 1

Traffic and Parking Study
Southdale Residential Project
City of Edina, Minnesota

Figure 6

Build Aternative 2

487

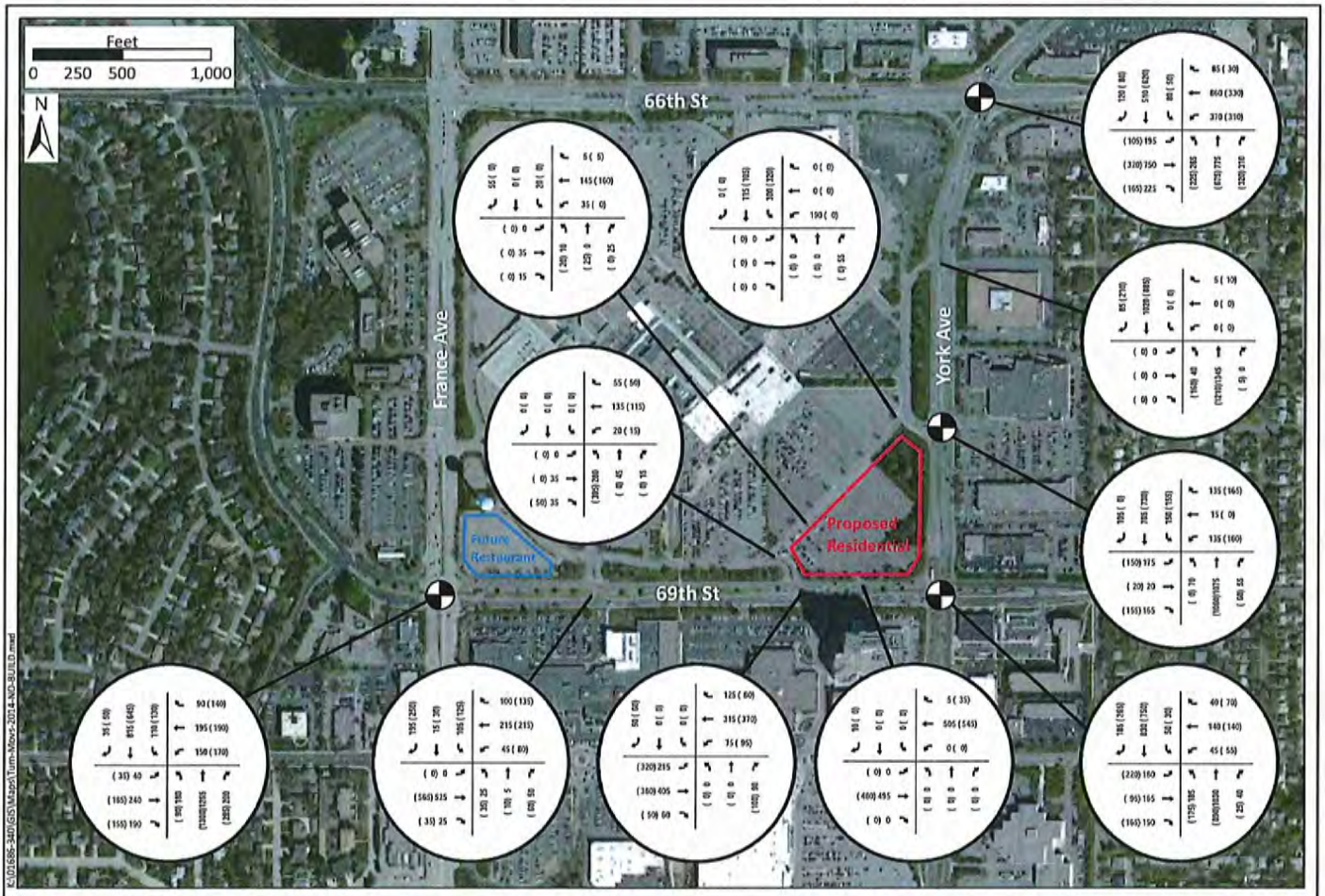

Traffic and Parking Study
Southdale Residential Project
City of Edina

PM (SAT)

Figure 7
2014 NO BUILD
Peak Hour Turning Movement Volumes

A88

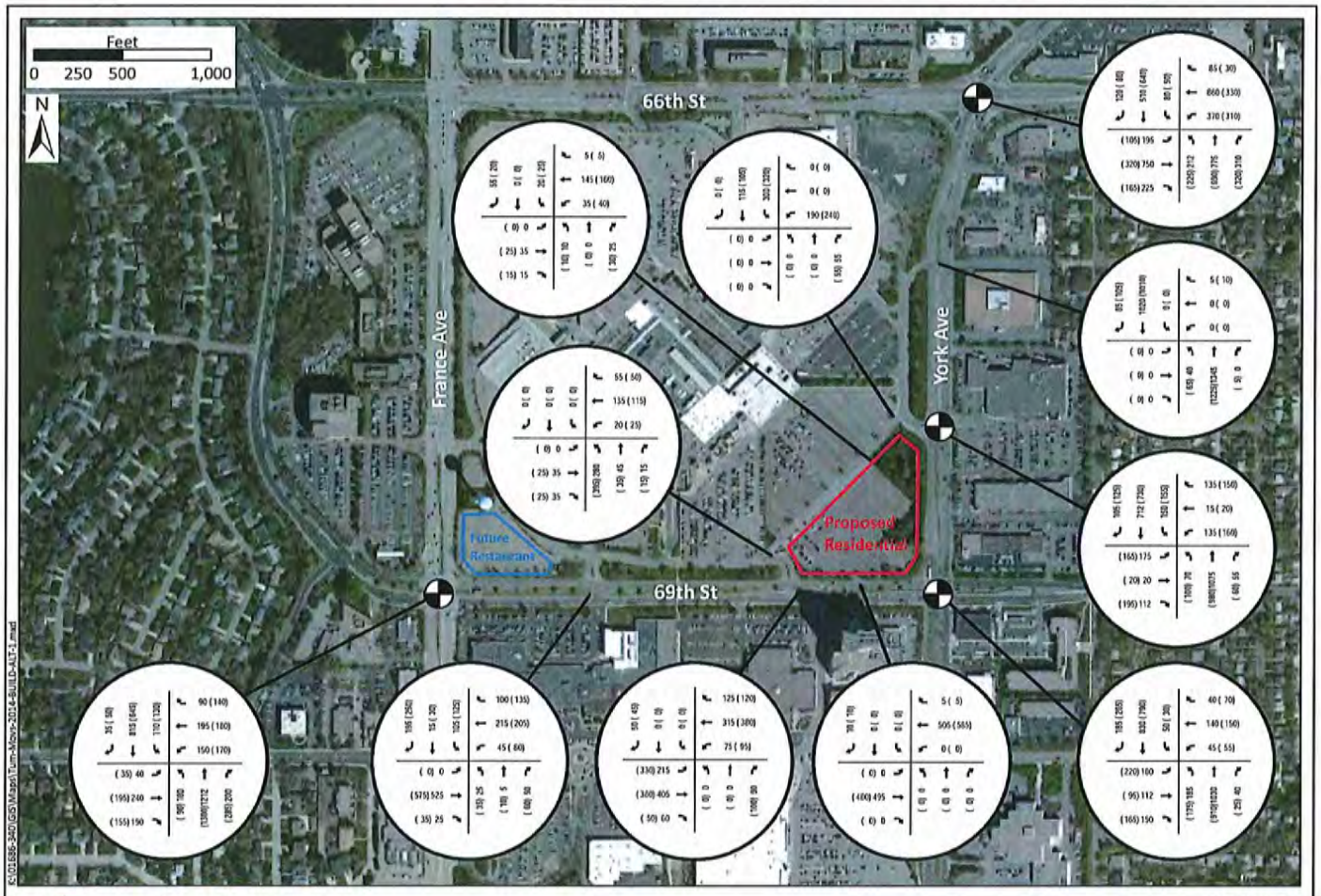

Traffic and Parking Study
Southdale Residential Project
City of Edina

PM (SAT)

Figure 8
2014 BUILD ALT 1
Peak Hour Turning Movement Volumes

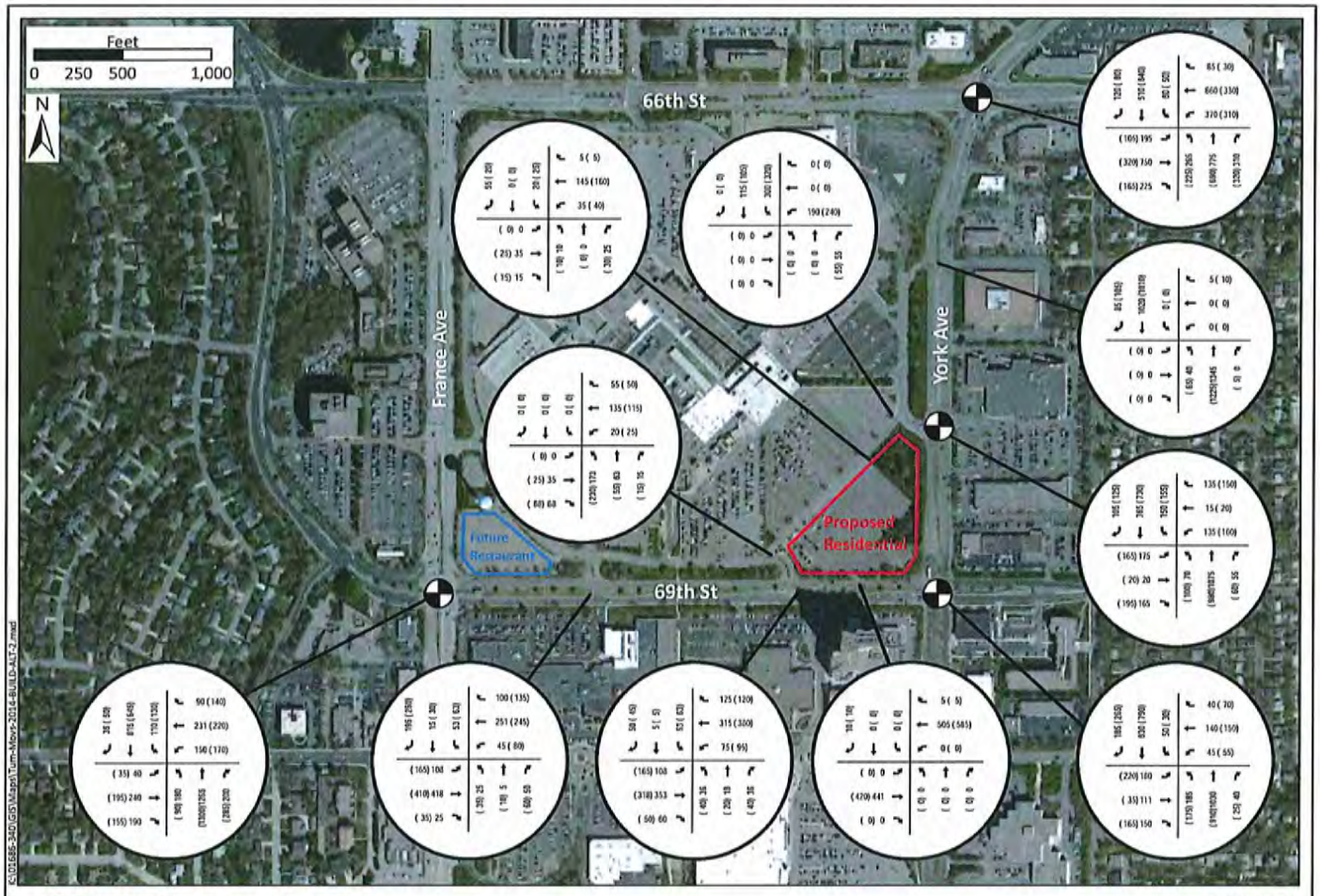

Traffic and Parking Study
Southdale Residential Project
City of Edina

PM (SAT)

Figure 9
2014 BUILD ALT 2
Peak Hour Turning Movement Volumes

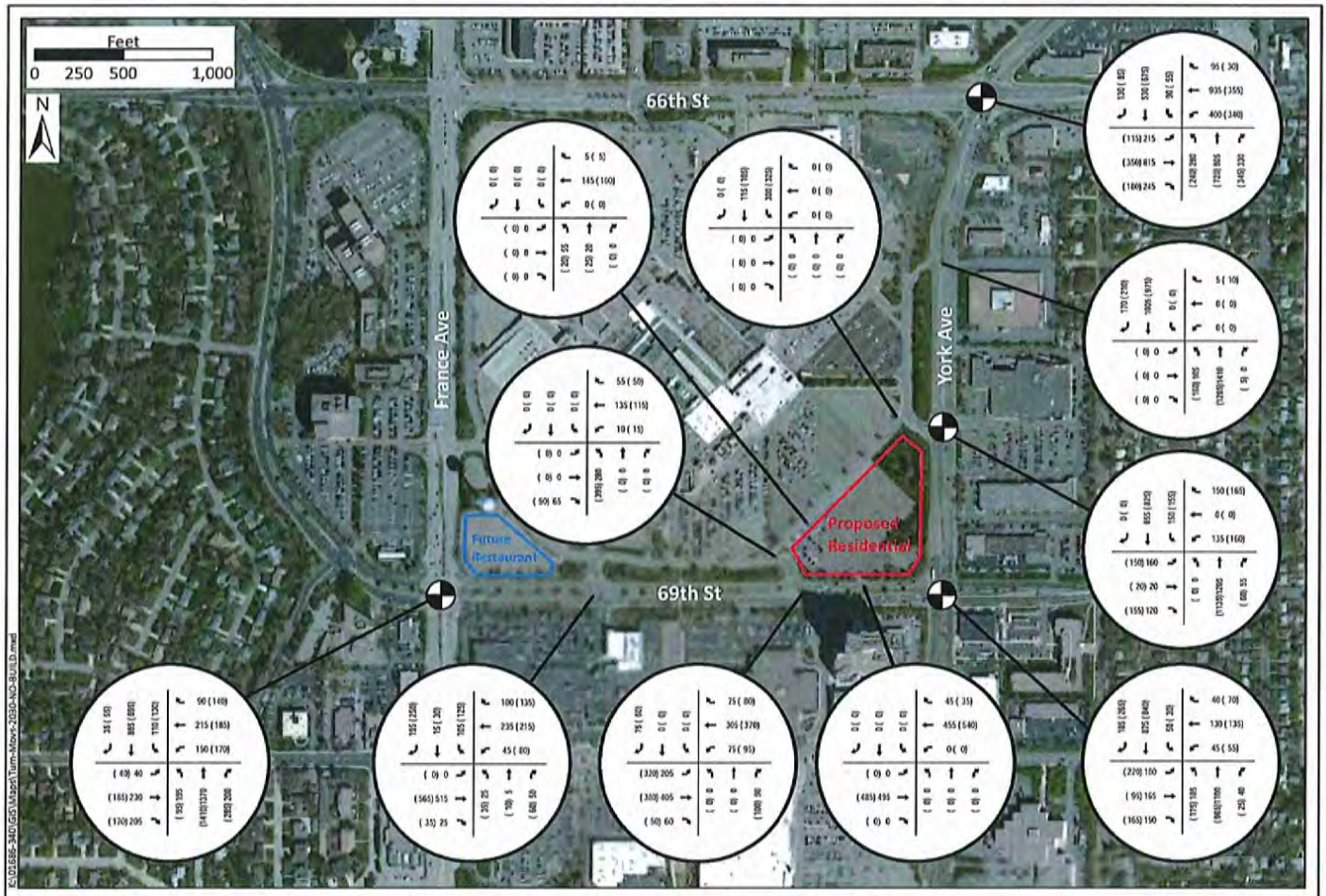

Traffic and Parking Study
Southdale Residential Project
City of Edina

PM (SAT)

Figure 10
2030 NO BUILD
Peak Hour Turning Movement Volumes

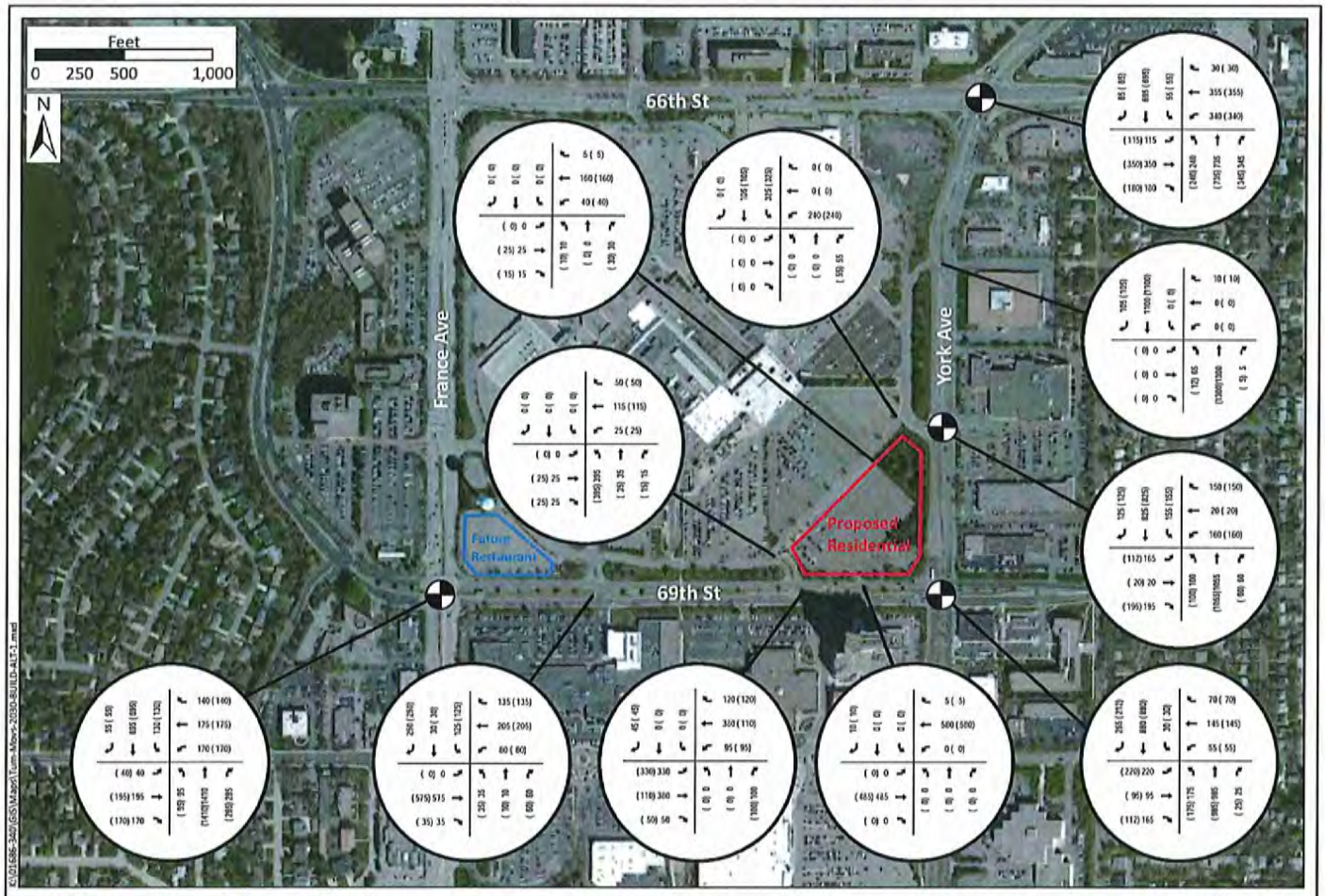

Traffic and Parking Study
Southdale Residential Project
City of Edina

PM (SAT)

Figure 11
2030 BUILD ALT 1
Peak Hour Turning Movement Volumes

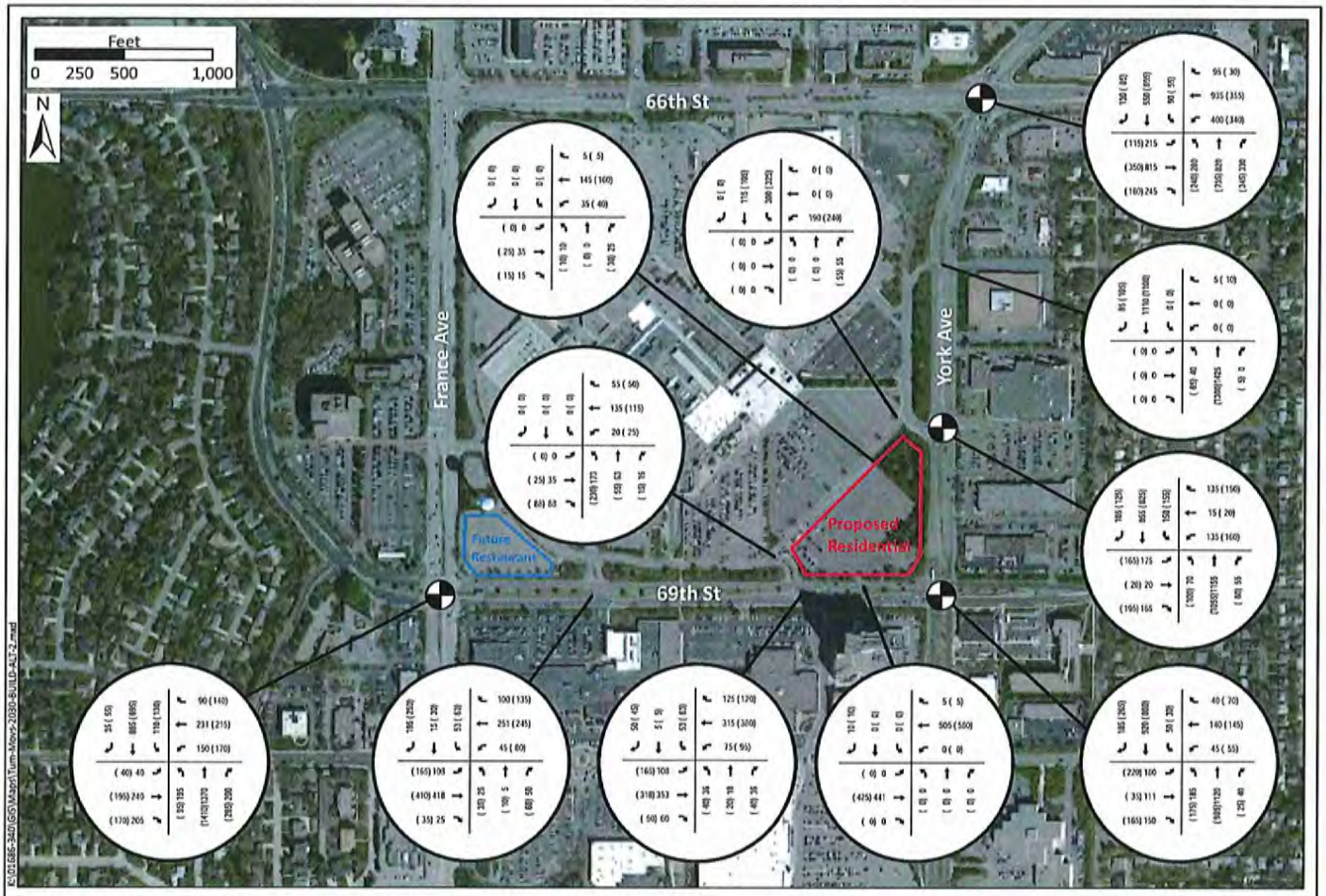

Traffic and Parking Study
Southdale Residential Project
City of Edina

PM (SAT)

Figure 12
2030 BUILD ALT 2
Peak Hour Turning Movement Volumes

A93

WSB & Associates

701 Xenia Ave S
Minneapolis, MN

York Ave & 66th St
2:30-6:30 pm
Edina, MN
90's

File Name : York Ave & 66th St
Site Code : 00000011
Start Date : 7/12/2012
Page No : 1

Groups Printed- Unshifted

	York Ave From North					66th St From East					York Ave From South					66th St From West					
Start Time	Right	Thru	Left	Peds	App. Total	Right	Thru	Left	Peds	App. Total	Right	Thru	Left	Peds	App. Total	Right	Thru	Left	Peds	App. Total	Int. Total
02:30 PM	44	135	19	0	198	10	84	72	0	166	53	124	59	0	236	54	58	36	0	148	748
02:45 PM	43	119	18	0	180	14	127	89	0	230	37	155	61	0	253	50	81	34	0	165	828
Total	87	254	37	0	378	24	211	161	0	396	90	279	120	0	489	104	139	70	0	313	1576
03:00 PM	40	109	19	0	168	25	127	91	0	243	63	130	60	0	253	53	92	28	0	173	837
03:15 PM	46	84	18	0	148	19	159	69	0	247	63	130	69	0	262	47	115	34	0	196	853
03:30 PM	29	109	19	0	157	14	160	79	0	253	63	158	65	0	286	56	153	42	0	251	947
03:45 PM	33	114	17	0	164	19	164	110	0	293	79	133	72	0	284	47	132	41	0	220	961
Total	148	416	73	0	637	77	610	349	0	1036	268	551	266	0	1085	203	492	145	0	840	3598
04:00 PM	30	110	22	0	162	15	150	92	0	257	69	159	48	0	276	66	123	36	0	225	920
04:15 PM	28	112	18	0	158	16	149	91	0	256	101	138	68	0	307	61	153	50	0	264	985
04:30 PM	24	123	17	0	164	30	176	81	0	287	60	165	66	0	291	61	157	29	0	247	989
04:45 PM	28	97	19	0	144	18	226	106	0	350	78	176	69	0	323	61	202	52	0	315	1132
Total	110	442	76	0	628	79	701	370	0	1150	308	638	251	0	1197	249	635	167	0	1051	4026
05:00 PM	39	95	19	3	156	18	197	84	0	299	84	185	60	0	329	59	183	57	0	299	1083
05:15 PM	26	127	23	0	176	16	224	103	0	343	82	180	63	0	325	47	169	54	0	270	1114
05:30 PM	28	117	15	0	160	35	180	80	0	295	69	186	59	0	314	46	126	44	0	216	985
05:45 PM	15	115	20	0	150	28	172	108	0	308	86	154	62	0	302	55	149	45	0	249	1009
Total	108	454	77	3	642	97	773	375	0	1245	321	705	244	0	1270	207	627	200	0	1034	4191
06:00 PM	26	137	10	0	173	9	123	97	0	229	81	183	66	0	330	41	115	39	0	195	927
06:15 PM	35	103	11	0	149	14	109	79	0	202	76	164	53	0	293	39	104	32	0	175	819
Grand Total	514	1806	284	3	2607	300	2527	1431	0	4258	1144	2520	1000	0	4664	843	2112	653	0	3608	15137
Apprch %	19.7	69.3	10.9	0.1		7	59.3	33.6	0		24.5	54	21.4	0		23.4	58.5	18.1	0		
Total %	3.4	11.9	1.9	0	17.2	2	16.7	9.5	0	28.1	7.6	16.6	6.6	0	30.8	5.6	14	4.3	0	23.8	

WSB & Associates

701 Xenia Ave S
Minneapolis, MN

York Ave & 66th St
2:30-6:30 pm
Edina, MN
90's

File Name : York Ave & 66th St
Site Code : 00000011
Start Date : 7/12/2012
Page No : 2

	York Ave From North					66th St From East					York Ave From South					66th St From West					
Start Time	Right	Thru	Left	Peds	App. Total	Right	Thru	Left	Peds	App. Total	Right	Thru	Left	Peds	App. Total	Right	Thru	Left	Peds	App. Total	Int. Total
Peak Hour Analysis From 02:30 PM to 06:15 PM - Peak 1 of 1																					
Peak Hour for Entire Intersection Begins at 04:30 PM																					
04:30 PM	24	123	17	0	164	**30**	176	81	0	287	60	165	66	0	291	**61**	157	29	0	247	989
04:45 PM	28	97	19	0	144	18	**226**	**106**	0	**350**	78	176	**69**	0	323	61	**202**	52	0	**315**	**1132**
05:00 PM	**39**	95	19	3	156	18	197	84	0	299	**84**	**185**	60	0	**329**	59	183	**57**	0	299	1083
05:15 PM	26	**127**	**23**	0	**176**	16	224	103	0	343	82	180	63	0	325	47	169	54	0	270	1114
Total Volume	117	442	78	3	640	82	823	374	0	1279	304	706	258	0	1268	228	711	192	0	1131	4318
% App. Total	18.3	69.1	12.2	0.5		6.4	64.3	29.2	0		24	55.7	20.3	0		20.2	62.9	17	0		
PHF	.750	.870	.848	.250	.909	.683	.910	.882	.000	.914	.905	.954	.935	.000	.964	.934	.880	.842	.000	.898	.954

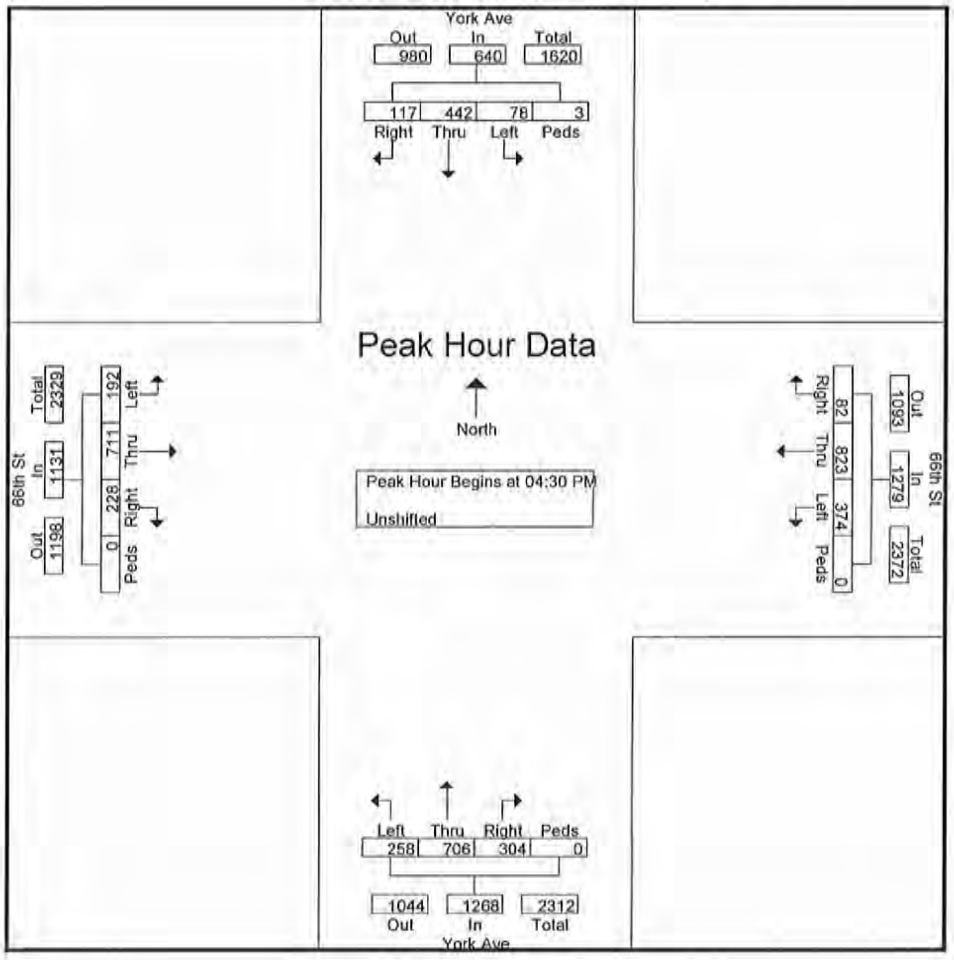

A95

WSB & Associates

701 Xenia Ave S
Minneapolis, MN

York Ave & 66th St
10:30-2:30
Edina, MN
pt cloudy

File Name : York Ave & 66th St-sat
Site Code : 00000011
Start Date : 7/21/2012
Page No : 1

Groups Printed- Unshifted

	York Ave From North					66th St From East					York Ave From South					66th St From West					
Start Time	Right	Thru	Left	Peds	App. Total	Right	Thru	Left	Peds	App. Total	Right	Thru	Left	Peds	App. Total	Right	Thru	Left	Peds	App. Total	Int. Total
10:30 AM	16	122	23	0	161	7	43	73	0	123	63	85	15	0	163	7	36	14	0	57	504
10:45 AM	20	175	12	0	207	0	53	79	0	132	56	113	49	0	218	23	58	19	0	100	657
Total	36	297	35	0	368	7	96	152	0	255	119	198	64	0	381	30	94	33	0	157	1161
11:00 AM	24	121	12	0	157	1	71	58	0	130	74	130	44	0	248	30	45	17	0	92	627
11:15 AM	23	138	17	0	178	13	66	73	0	152	66	136	43	0	245	36	55	26	0	117	692
11:30 AM	12	150	12	0	174	3	58	79	1	141	67	125	46	0	238	39	63	24	0	126	679
11:45 AM	16	182	13	0	211	0	71	84	0	155	81	168	50	0	299	37	77	18	0	132	797
Total	75	591	54	0	720	17	266	294	1	578	288	559	183	0	1030	142	240	85	0	467	2795
12:00 PM	26	130	13	0	169	0	82	76	0	158	94	145	59	0	298	40	77	18	0	135	760
12:15 PM	15	142	15	0	172	7	76	75	0	158	76	167	40	0	283	46	65	28	0	139	752
12:30 PM	15	150	6	0	171	6	69	88	0	163	87	145	58	0	290	49	66	26	0	141	765
12:45 PM	11	149	13	0	173	12	71	84	0	167	78	153	59	0	290	39	70	37	0	146	776
Total	67	571	47	0	685	25	298	323	0	646	335	610	216	0	1161	174	278	109	0	561	3053
01:00 PM	24	143	9	0	176	3	71	70	0	144	94	148	58	0	300	42	58	31	0	131	751
01:15 PM	15	147	10	0	172	6	78	77	1	162	79	148	47	0	274	39	87	16	0	142	750
01:30 PM	25	140	14	0	179	4	66	96	0	166	65	170	56	1	292	54	65	18	0	137	774
01:45 PM	18	135	14	0	167	2	70	62	0	134	72	129	60	0	261	42	73	25	0	140	702
Total	82	565	47	0	694	15	285	305	1	606	310	595	221	1	1127	177	283	90	0	550	2977
02:00 PM	15	138	16	0	169	9	77	70	0	156	83	136	49	0	268	26	79	39	0	144	737
02:15 PM	20	137	22	0	179	15	75	92	0	182	55	156	55	0	266	39	69	36	0	144	771
Grand Total	295	2299	221	0	2815	88	1097	1236	2	2423	1190	2254	788	1	4233	588	1043	392	0	2023	11494
Apprch %	10.5	81.7	7.9	0		3.6	45.3	51	0.1		28.1	53.2	18.6	0		29.1	51.6	19.4	0		
Total %	2.6	20	1.9	0	24.5	0.8	9.5	10.8	0	21.1	10.4	19.6	6.9	0	36.8	5.1	9.1	3.4	0	17.6	

WSB & Associates

701 Xenia Ave S
Minneapolis, MN

York Ave & 66th St
10:30-2:30
Edina, MN
pt cloudy

File Name : York Ave & 66th St-sat
Site Code : 00000011
Start Date : 7/21/2012
Page No : 2

	York Ave From North					66th St From East					York Ave From South					66th St From West					
Start Time	Right	Thru	Left	Peds	App. Total	Right	Thru	Left	Peds	App. Total	Right	Thru	Left	Peds	App. Total	Right	Thru	Left	Peds	App. Total	Int. Total
Peak Hour Analysis From 10:30 AM to 02:15 PM - Peak 1 of 1																					
Peak Hour for Entire Intersection Begins at 11:45 AM																					
11:45 AM	16	**182**	13	0	**211**	0	71	84	0	155	81	**168**	50	0	**299**	37	**77**	18	0	132	**797**
12:00 PM	**26**	130	13	0	169	0	**82**	76	0	158	**94**	145	**59**	0	298	40	77	18	0	135	760
12:15 PM	15	142	**15**	0	172	7	76	75	0	158	76	167	40	0	283	46	65	**28**	0	139	752
12:30 PM	15	150	6	0	171	6	69	**88**	0	**163**	87	145	58	0	290	**49**	66	26	0	**141**	765
Total Volume	72	604	47	0	723	13	298	323	0	634	338	625	207	0	1170	172	285	90	0	547	3074
% App. Total	10	83.5	6.5	0		2.1	47	50.9	0		28.9	53.4	17.7	0		31.4	52.1	16.5	0		
PHF	.692	.830	.783	.000	.857	.464	.909	.918	.000	.972	.899	.930	.877	.000	.978	.878	.925	.804	.000	.970	.964

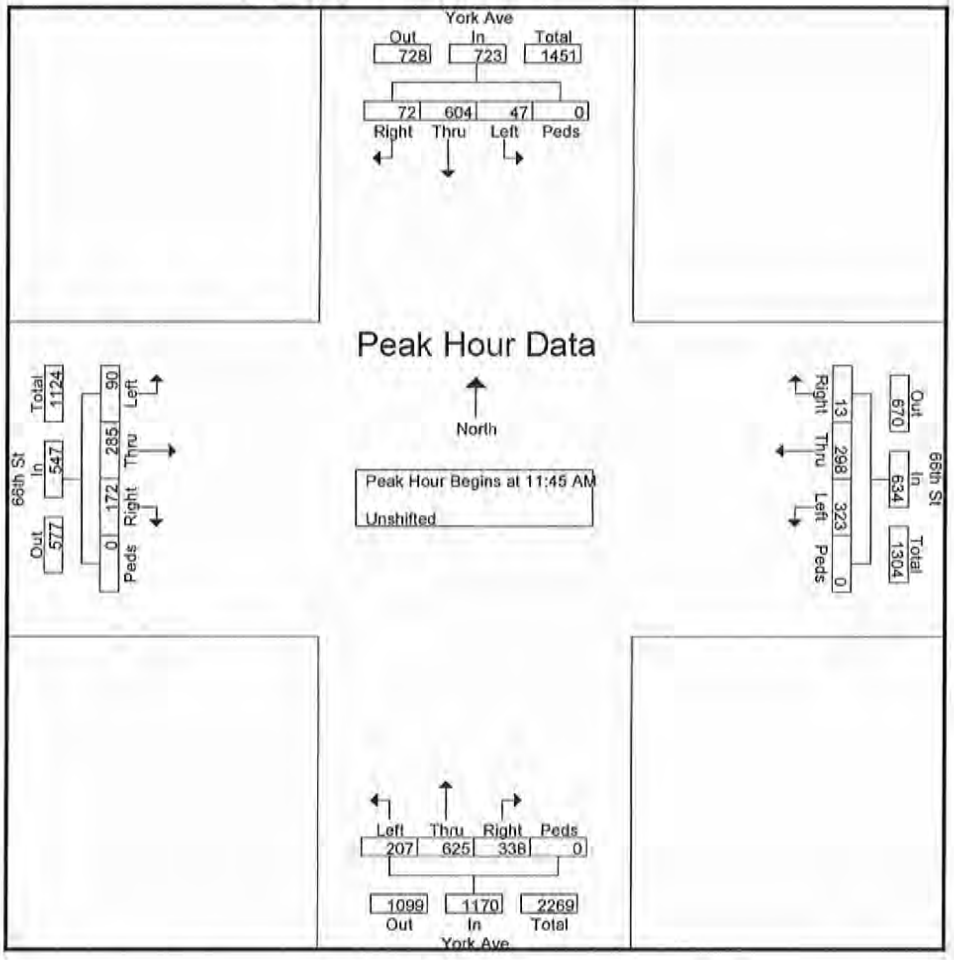

WSB & Associates

701 Xenia Ave S
Minneapolis, MN

York Ave & Southdale Ent-site 8
2:30-6:30 pm
Edina, MN
90's

File Name : York Ave & Southdale Ent-site 8
Site Code : 00000008
Start Date : 7/11/2012
Page No : 1

Groups Printed- Unshifted

	York Ave From North					Entrance From East					York Ave From South					Southdale Ent From West					
Start Time	Right	Thru	Left	Peds	App. Total	Right	Thru	Left	Peds	App. Total	Right	Thru	Left	Peds	App. Total	Right	Thru	Left	Peds	App. Total	Int. Total
02:30 PM	0	93	28	1	122	39	0	32	0	71	10	233	0	0	243	15	0	27	0	42	478
02:45 PM	0	177	37	0	214	21	0	35	0	56	6	221	0	0	227	31	10	20	0	61	558
Total	0	270	65	1	336	60	0	67	0	127	16	454	0	0	470	46	10	47	0	103	1036
03:00 PM	0	156	27	0	183	41	0	30	0	71	5	223	0	0	228	23	8	20	0	51	533
03:15 PM	0	185	39	0	224	40	0	23	0	63	16	213	0	0	229	28	6	25	0	59	575
03:30 PM	0	163	26	0	189	42	0	37	0	79	15	210	0	0	225	16	11	27	4	58	551
03:45 PM	0	179	41	0	220	32	0	32	0	64	16	238	0	0	254	18	3	25	0	46	584
Total	0	683	133	0	816	155	0	122	0	277	52	884	0	0	936	85	28	97	4	214	2243
04:00 PM	0	138	37	0	175	36	0	25	0	61	15	229	0	0	244	32	7	37	0	76	556
04:15 PM	0	175	38	0	213	33	0	34	0	67	14	246	0	0	260	18	4	27	0	49	589
04:30 PM	0	172	35	0	207	33	0	39	0	72	9	243	0	0	252	15	5	23	1	44	575
04:45 PM	0	185	39	0	224	29	0	33	0	62	17	282	0	0	299	17	2	29	2	50	635
Total	0	670	149	0	819	131	0	131	0	262	55	1000	0	0	1055	82	18	116	3	219	2355
05:00 PM	0	164	33	0	197	40	0	36	0	76	12	234	0	0	246	15	5	26	3	49	568
05:15 PM	0	155	39	0	194	44	0	27	0	71	15	291	0	0	306	29	5	34	0	68	639
05:30 PM	0	161	41	0	202	43	0	29	0	72	17	201	0	0	218	30	5	28	2	65	557
05:45 PM	0	182	49	0	231	47	0	44	0	91	15	260	0	0	275	10	7	17	2	36	633
Total	0	662	162	0	824	174	0	136	0	310	59	986	0	0	1045	84	22	105	7	218	2397
06:00 PM	0	140	20	0	160	44	0	33	0	77	15	214	0	0	229	21	4	34	1	60	526
06:15 PM	0	167	33	0	200	31	0	32	0	63	8	213	0	0	221	16	4	15	0	35	519
Grand Total	0	2592	562	1	3155	595	0	521	0	1116	205	3751	0	0	3956	334	86	414	15	849	9076
Apprch %	0	82.2	17.8	0		53.3	0	46.7	0		5.2	94.8	0	0		39.3	10.1	48.8	1.8		
Total %	0	28.6	6.2	0	34.8	6.6	0	5.7	0	12.3	2.3	41.3	0	0	43.6	3.7	0.9	4.6	0.2	9.4	

WSB & Associates

701 Xenia Ave S
Minneapolis, MN

York Ave & Southdale Ent-site 8
2:30-6:30 pm
Edina, MN
90's

File Name : York Ave & Southdale Ent-site 8
Site Code : 00000008
Start Date : 7/11/2012
Page No : 2

	York Ave From North					Entrance From East					York Ave From South					Southdale Ent From West					
Start Time	Right	Thru	Left	Peds	App. Total	Right	Thru	Left	Peds	App. Total	Right	Thru	Left	Peds	App. Total	Right	Thru	Left	Peds	App. Total	Int. Total
Peak Hour Analysis From 02:30 PM to 06:15 PM - Peak 1 of 1																					
Peak Hour for Entire Intersection Begins at 04:30 PM																					
04:30 PM	0	172	35	0	207	33	0	39	0	72	9	243	0	0	252	15	5	23	1	44	575
04:45 PM	0	185	39	0	224	29	0	33	0	62	17	282	0	0	299	17	2	29	2	50	635
05:00 PM	0	164	33	0	197	40	0	36	0	76	12	234	0	0	246	15	5	26	3	49	568
05:15 PM	0	155	39	0	194	44	0	27	0	71	15	291	0	0	306	29	5	34	0	68	639
Total Volume	0	676	146	0	822	146	0	135	0	281	53	1050	0	0	1103	76	17	112	6	211	2417
% App. Total	0	82.2	17.8	0		52	0	48	0		4.8	95.2	0	0		36	8.1	53.1	2.8		
PHF	.000	.914	.936	.000	.917	.830	.000	.865	.000	.924	.779	.902	.000	.000	.901	.655	.850	.824	.500	.776	.946

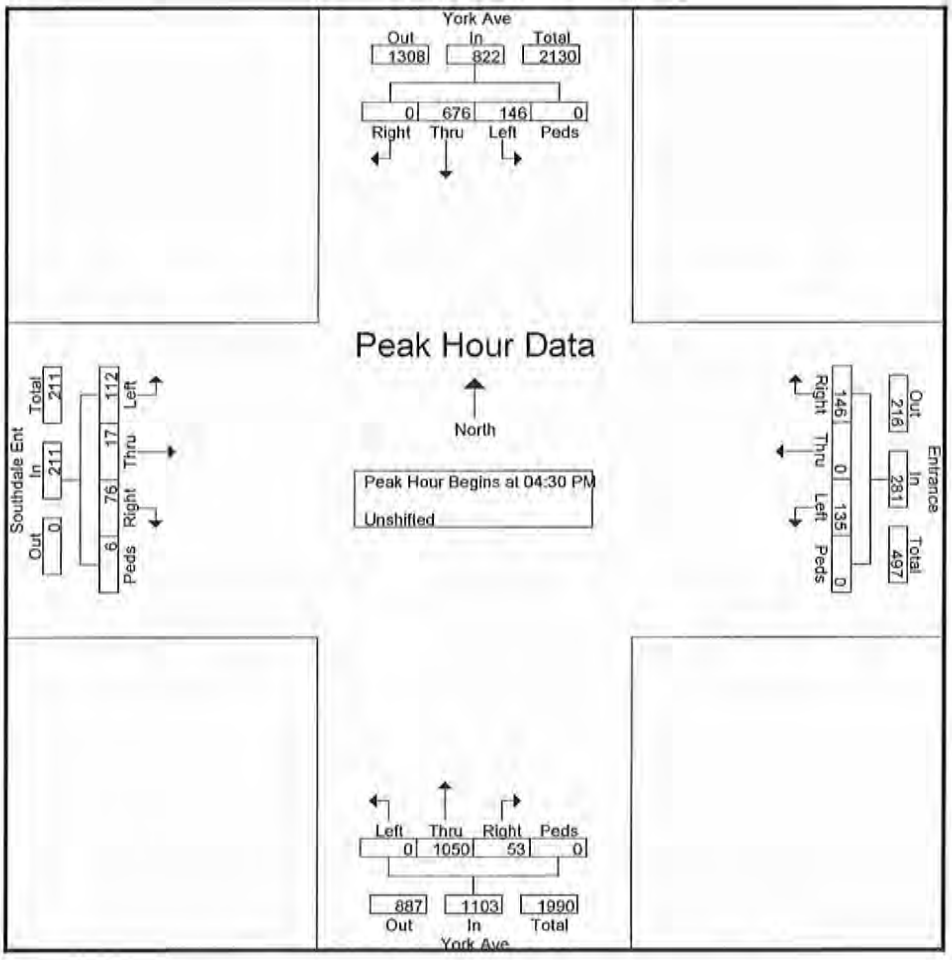

WSB & Associates

701 Xenia Ave S
Minneapolis, MN

Default Comments
Change These in The Preferences Window
Select File/Preference in the Main Scree
Then Click the Comments Tab

File Name : York Ave & Southdale Ent-site 8-sat
Site Code : 00000008
Start Date : 7/21/2012
Page No : 1

Groups Printed- Unshifted

	From North					From East					From South					From West					
Start Time	Right	Thru	Left	Peds	App. Total	Right	Thru	Left	Peds	App. Total	Right	Thru	Left	Peds	App. Total	Right	Thru	Left	Peds	App. Total	Int. Total
10:30 AM	0	160	28	0	188	29	0	21	0	50	9	148	0	0	157	12	4	6	1	23	418
10:45 AM	0	184	49	0	233	25	0	17	0	42	11	179	0	0	190	17	7	27	0	51	516
Total	0	344	77	0	421	54	0	38	0	92	20	327	0	0	347	29	11	33	1	74	934
11:00 AM	0	161	32	0	193	33	0	33	0	66	13	182	0	0	195	12	1	5	0	18	472
11:15 AM	11	96	34	0	141	36	68	6	0	110	10	131	2	0	143	24	5	10	0	39	433
11:30 AM	1	158	39	0	198	37	0	23	0	60	18	165	0	0	183	19	5	20	0	44	485
11:45 AM	0	213	37	0	250	49	0	30	0	79	16	222	0	0	238	40	2	17	0	59	626
Total	12	628	142	0	782	155	68	92	0	315	57	700	2	0	759	95	13	52	0	160	2016
12:00 PM	0	144	33	0	177	46	0	40	0	86	3	219	0	0	222	28	5	27	0	60	545
12:15 PM	0	166	41	0	207	37	0	37	0	74	11	223	1	0	235	31	1	19	0	51	567
12:30 PM	0	160	38	0	198	46	0	33	0	79	9	211	0	0	220	17	6	22	0	45	542
12:45 PM	0	172	30	0	202	33	0	30	0	63	17	227	0	0	244	20	4	22	0	46	555
Total	0	642	142	0	784	162	0	140	0	302	40	880	1	0	921	96	16	90	0	202	2209
01:00 PM	3	132	44	0	179	41	41	32	0	114	12	175	0	0	187	33	3	24	0	60	540
01:15 PM	0	178	29	0	207	38	0	40	0	78	15	226	1	0	242	26	3	26	0	55	582
01:30 PM	0	150	50	0	200	29	0	35	0	64	12	208	0	0	220	24	9	27	0	60	544
01:45 PM	0	145	50	0	195	36	2	34	1	73	14	211	0	0	225	25	3	34	0	62	555
Total	3	605	173	0	781	144	43	141	1	329	53	820	1	0	874	108	18	111	0	237	2221
02:00 PM	5	161	52	0	218	35	0	31	0	66	15	195	0	0	210	33	3	25	0	61	555
02:15 PM	0	180	41	0	221	58	0	37	0	95	13	215	0	0	228	25	5	18	0	48	592
Grand Total	20	2560	627	0	3207	608	111	479	1	1199	198	3137	4	0	3339	386	66	329	1	782	8527
Apprch %	0.6	79.8	19.6	0		50.7	9.3	39.9	0.1		5.9	94	0.1	0		49.4	8.4	42.1	0.1		
Total %	0.2	30	7.4	0	37.6	7.1	1.3	5.6	0	14.1	2.3	36.8	0	0	39.2	4.5	0.8	3.9	0	9.2	

A100

WSB & Associates

701 Xenia Ave S
Minneapolis, MN

Default Comments
Change These in The Preferences Window
Select File/Preference in the Main Scree
Then Click the Comments Tab

File Name : York Ave & Southdale Ent-site 8-sat
Site Code : 00000008
Start Date : 7/21/2012
Page No : 2

	From North					From East					From South					From West					
Start Time	Right	Thru	Left	Peds	App. Total	Right	Thru	Left	Peds	App. Total	Right	Thru	Left	Peds	App. Total	Right	Thru	Left	Peds	App. Total	Int. Total
Peak Hour Analysis From 10:30 AM to 02:15 PM - Peak 1 of 1																					
Peak Hour for Entire Intersection Begins at 11:45 AM																					
11:45 AM	0	**213**	37	0	**250**	**49**	0	30	0	79	**16**	222	0	0	**238**	**40**	2	17	0	59	**626**
12:00 PM	0	144	33	0	177	46	0	**40**	0	**86**	3	219	0	0	222	28	5	**27**	0	**60**	545
12:15 PM	0	166	**41**	0	207	37	0	37	0	74	11	**223**	1	0	235	31	1	19	0	51	567
12:30 PM	0	160	38	0	198	46	0	33	0	79	9	211	0	0	220	17	**6**	22	0	45	542
Total Volume	0	683	149	0	832	178	0	140	0	318	39	875	1	0	915	116	14	85	0	215	2280
% App. Total	0	82.1	17.9	0		56	0	44	0		4.3	95.6	0.1	0		54	6.5	39.5	0		
PHF	.000	.802	.909	.000	.832	.908	.000	.875	.000	.924	.609	.981	.250	.000	.961	.725	.583	.787	.000	.896	.911

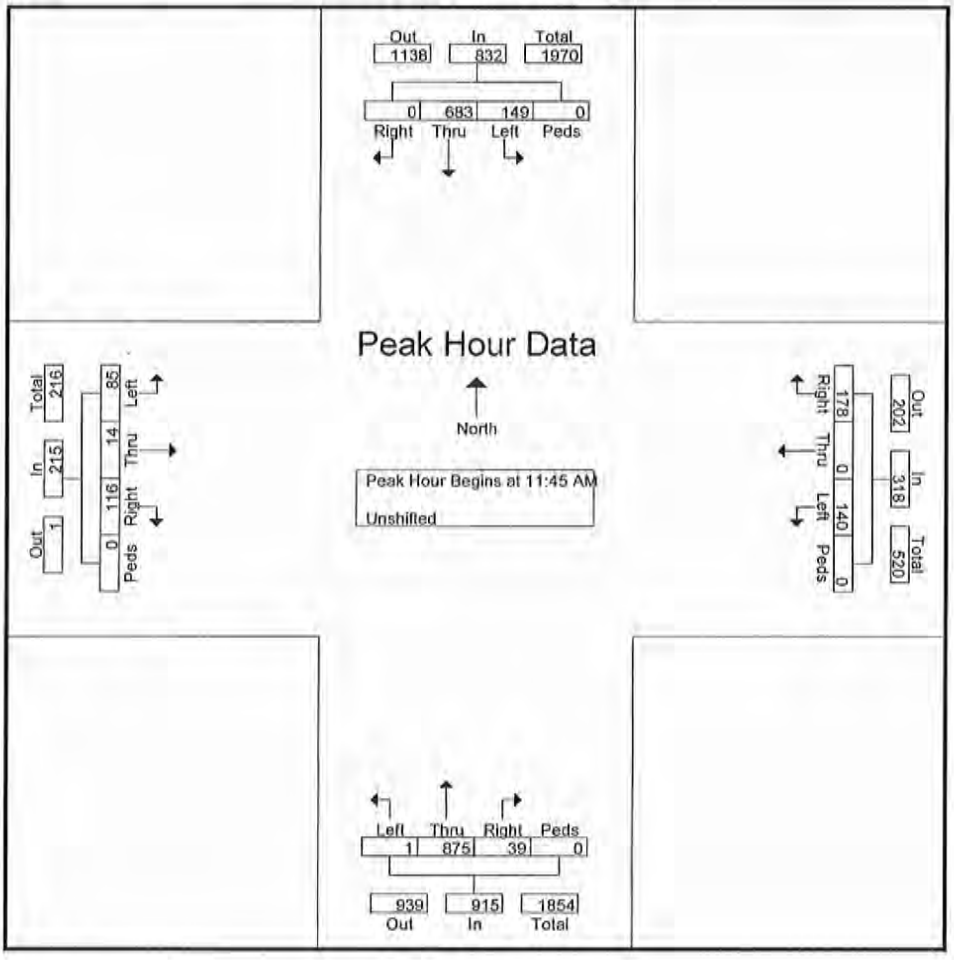

A101

WSB & Associates

701 Xenia Ave S
Minneapolis, MN

York Ave & Southdale Ent-site 9
2:30-6:30
Edina MN
90's

File Name : York Ave & southdale ent-site 9
Site Code : 00000009
Start Date : 7/12/2012
Page No : 1

Groups Printed- Unshifted

	York Ave From North					Entrance From East					York Ave From South					Southdale Ent From West					
Start Time	Right	Thru	Left	Peds	App. Total	Right	Thru	Left	Peds	App. Total	Right	Thru	Left	Peds	App. Total	Right	Thru	Left	Peds	App. Total	Int. Total
02:30 PM	29	212	0	1	242	1	0	0	1	2	0	250	11	0	261	0	0	0	0	0	505
02:45 PM	33	217	0	1	251	0	0	0	0	0	0	225	9	0	234	0	0	0	0	0	485
Total	62	429	0	2	493	1	0	0	1	2	0	475	20	0	495	0	0	0	0	0	990
03:00 PM	35	203	0	1	239	0	0	0	1	1	5	232	15	1	253	0	0	0	1	1	494
03:15 PM	19	173	0	5	197	1	0	0	1	2	1	264	11	0	276	0	0	0	1	1	476
03:30 PM	32	198	0	0	230	1	0	0	4	5	0	281	12	0	293	0	0	0	3	3	531
03:45 PM	27	238	0	0	265	0	0	0	4	4	0	280	15	0	295	0	0	0	0	0	564
Total	113	812	0	6	931	2	0	0	10	12	6	1057	53	1	1117	0	0	0	5	5	2065
04:00 PM	35	217	0	2	254	1	0	0	6	7	0	286	14	0	300	0	0	0	0	0	561
04:15 PM	37	207	0	1	245	3	0	0	4	7	1	309	18	0	328	0	0	0	2	2	582
04:30 PM	24	224	0	1	249	1	0	0	6	7	1	297	9	1	308	0	0	0	0	0	564
04:45 PM	39	210	0	2	251	1	0	0	2	3	1	317	16	1	335	0	0	0	0	0	589
Total	135	858	0	6	999	6	0	0	18	24	3	1209	57	2	1271	0	0	0	2	2	2296
05:00 PM	31	208	0	1	240	1	0	0	1	2	0	326	21	2	349	0	0	0	0	0	591
05:15 PM	28	223	0	1	252	1	0	0	3	4	0	307	19	1	327	0	0	0	0	0	583
05:30 PM	27	199	0	0	226	2	0	0	7	9	1	312	17	3	333	0	0	0	1	1	569
05:45 PM	30	221	0	1	252	1	0	0	9	10	0	293	14	1	308	0	0	0	1	1	571
Total	116	851	0	3	970	5	0	0	20	25	1	1238	71	7	1317	0	0	0	2	2	2314
06:00 PM	32	215	0	0	247	1	0	0	2	3	0	305	6	0	311	0	0	0	0	0	561
06:15 PM	28	174	0	0	202	0	0	0	3	3	0	259	20	1	280	0	0	0	2	2	487
Grand Total	486	3339	0	17	3842	15	0	0	54	69	10	4543	227	11	4791	0	0	0	11	11	8713
Apprch %	12.6	86.9	0	0.4		21.7	0	0	78.3		0.2	94.8	4.7	0.2		0	0	0	100		
Total %	5.6	38.3	0	0.2	44.1	0.2	0	0	0.6	0.8	0.1	52.1	2.6	0.1	55	0	0	0	0.1	0.1	

A103

WSB & Associates

701 Xenia Ave S
Minneapolis, MN

York Ave & Southdale Ent-site 9
2:30-6:30
Edina MN
90's

File Name : York Ave & southdale ent-site 9
Site Code : 00000009
Start Date : 7/12/2012
Page No : 2

	York Ave From North					Entrance From East					York Ave From South					Southdale Ent From West					
Start Time	Right	Thru	Left	Peds	App. Total	Right	Thru	Left	Peds	App. Total	Right	Thru	Left	Peds	App. Total	Right	Thru	Left	Peds	App. Total	Int. Total
Peak Hour Analysis From 02:30 PM to 06:15 PM - Peak 1 of 1																					
Peak Hour for Entire Intersection Begins at 04:45 PM																					
04:45 PM	39	210	0	2	251	1	0	0	2	3	1	317	16	1	335	0	0	0	0	0	589
05:00 PM	31	208	0	1	240	1	0	0	1	2	0	326	21	2	349	0	0	0	0	0	591
05:15 PM	28	223	0	1	252	1	0	0	3	4	0	307	19	1	327	0	0	0	0	0	583
05:30 PM	27	199	0	0	226	2	0	0	7	9	1	312	17	3	333	0	0	0	1	1	569
Total Volume	125	840	0	4	969	5	0	0	13	18	2	1262	73	7	1344	0	0	0	1	1	2332
% App. Total	12.9	86.7	0	0.4		27.8	0	0	72.2		0.1	93.9	5.4	0.5		0	0	0	100		
PHF	.801	.942	.000	.500	.961	.625	.000	.000	.464	.500	.500	.968	.869	.583	.963	.000	.000	.000	.250	.250	.986

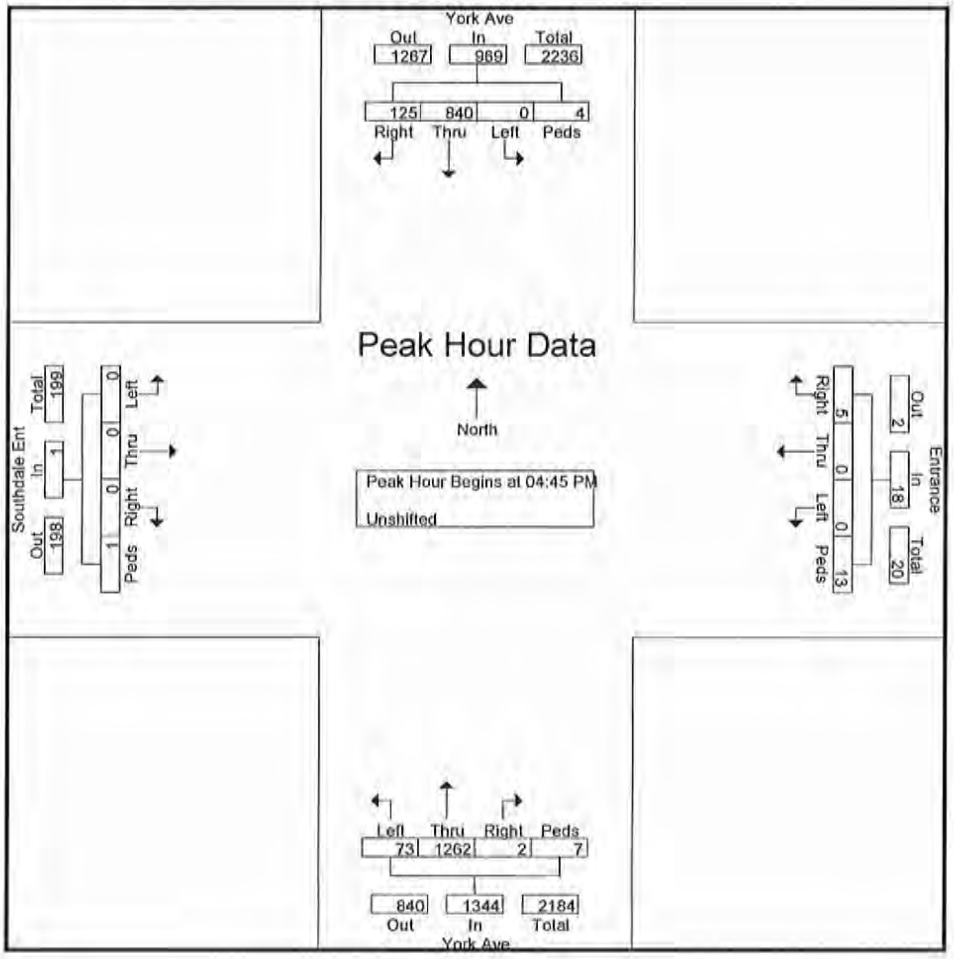

A103

WSB & Associates

701 Xenia Ave S
Minneapolis, MN

York Ave & Southdale Ent-site 9
10:30-2:30
Edina MN
pt cloudy

File Name : York Ave & southdale ent-site 9-sat
Site Code : 00000009
Start Date : 7/21/2012
Page No : 1

Groups Printed- Unshifted

	York Ave From North					Entrance From East					York Ave From South					Southdale Ent From West					
Start Time	Right	Thru	Left	Peds	App. Total	Right	Thru	Left	Peds	App. Total	Right	Thru	Left	Peds	App. Total	Right	Thru	Left	Peds	App. Total	Int. Total
10:30 AM	32	171	0	1	204	1	0	0	1	2	0	171	12	0	183	0	0	0	0	0	389
10:45 AM	41	236	0	1	278	0	0	0	0	0	2	213	18	0	233	0	0	0	0	0	511
Total	73	407	0	2	482	1	0	0	1	2	2	384	30	0	416	0	0	0	0	0	900
11:00 AM	39	172	0	1	212	1	0	0	1	2	4	197	23	1	225	0	0	0	0	0	439
11:15 AM	42	205	0	3	250	1	0	0	1	2	1	151	26	0	178	0	0	0	0	0	430
11:30 AM	39	229	0	0	268	1	0	0	2	3	0	194	28	1	223	0	0	0	1	1	495
11:45 AM	36	268	0	0	304	0	0	0	2	2	1	256	32	1	290	0	0	0	0	0	596
Total	156	874	0	4	1034	3	0	0	6	9	6	798	109	3	916	0	0	0	1	1	1960
12:00 PM	41	208	0	2	251	1	0	0	2	3	1	251	41	1	294	0	0	0	0	0	548
12:15 PM	35	225	0	2	262	2	0	0	1	3	2	256	23	0	281	0	0	0	2	2	548
12:30 PM	29	259	0	0	288	1	0	0	2	3	1	256	23	1	281	0	0	0	0	0	572
12:45 PM	46	232	0	2	280	4	0	0	2	6	1	258	24	1	284	0	0	0	0	0	570
Total	151	924	0	6	1081	8	0	0	7	15	5	1021	111	3	1140	0	0	0	2	2	2238
01:00 PM	42	215	0	1	258	1	0	0	1	2	2	222	18	2	244	0	0	0	2	2	506
01:15 PM	35	236	0	1	272	1	0	0	2	3	0	261	29	1	291	0	0	0	0	0	566
01:30 PM	32	250	0	2	284	2	0	0	4	6	1	229	35	2	267	0	0	0	1	1	558
01:45 PM	39	203	0	0	242	1	0	0	2	3	2	239	42	1	284	0	0	0	1	1	530
Total	148	904	0	4	1056	5	0	0	9	14	5	951	124	6	1086	0	0	0	4	4	2160
02:00 PM	31	200	0	0	231	1	0	0	1	2	1	224	31	0	256	0	0	0	0	0	489
02:15 PM	42	226	0	0	268	0	0	0	2	2	0	262	29	1	292	0	0	0	1	1	563
Grand Total	601	3535	0	16	4152	18	0	0	26	44	19	3640	434	13	4106	0	0	0	8	8	8310
Apprch %	14.5	85.1	0	0.4		40.9	0	0	59.1		0.5	88.7	10.6	0.3		0	0	0	100		
Total %	7.2	42.5	0	0.2	50	0.2	0	0	0.3	0.5	0.2	43.8	5.2	0.2	49.4	0	0	0	0.1	0.1	

WSB & Associates

701 Xenia Ave S
Minneapolis, MN

York Ave & Southdale Ent-site 9
10:30-2:30
Edina MN
pt cloudy

File Name : York Ave & southdale ent-site 9-sat
Site Code : 00000009
Start Date : 7/21/2012
Page No : 2

	York Ave From North					Entrance From East					York Ave From South					Southdale Ent From West					
Start Time	Right	Thru	Left	Peds	App. Total	Right	Thru	Left	Peds	App. Total	Right	Thru	Left	Peds	App. Total	Right	Thru	Left	Peds	App. Total	Int. Total
Peak Hour Analysis From 10:30 AM to 02:15 PM - Peak 1 of 1																					
Peak Hour for Entire Intersection Begins at 11:45 AM																					
11:45 AM	36	268	0	0	304	0	0	0	2	2	1	256	32	1	290	0	0	0	0	0	596
12:00 PM	41	208	0	2	251	1	0	0	2	3	1	251	41	1	294	0	0	0	0	0	548
12:15 PM	35	225	0	2	262	2	0	0	1	3	2	256	23	0	281	0	0	0	2	2	548
12:30 PM	29	259	0	0	288	1	0	0	2	3	1	256	23	1	281	0	0	0	0	0	572
Total Volume	141	960	0	4	1105	4	0	0	7	11	5	1019	119	3	1146	0	0	0	2	2	2264
% App. Total	12.8	86.9	0	0.4		36.4	0	0	63.6		0.4	88.9	10.4	0.3		0	0	0	100		
PHF	.860	.896	.000	.500	.909	.500	.000	.000	.875	.917	.625	.995	.726	.750	.974	.000	.000	.000	.250	.250	.950

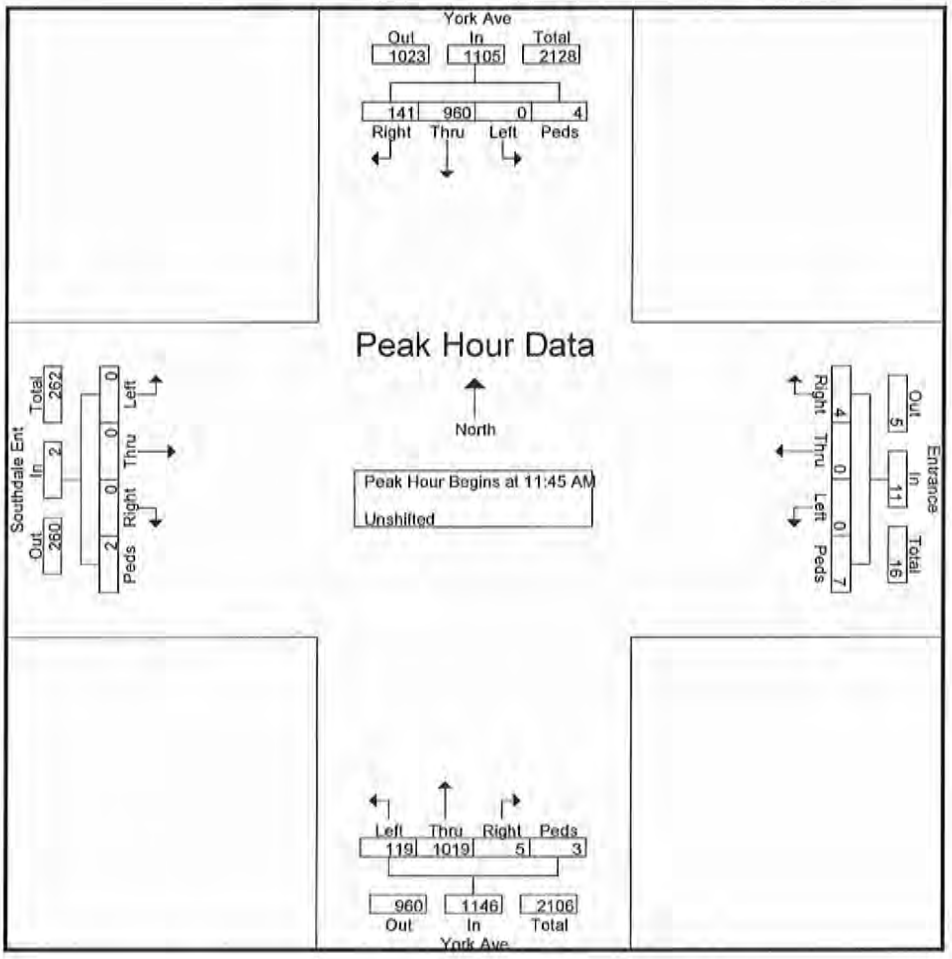

A105

WSB & Associates

701 Xenia Ave S
Minneapolis, MN

York Ave & 69th St
2:30-6:30 pm
Edina, MN
90's

File Name : York Ave & 69th St
Site Code : 00000005
Start Date : 7/10/2012
Page No : 1

Groups Printed- Unshifted

	From North					69th St From East					From South					69th St From West					
Start Time	Right	Thru	Left	Peds	App. Total	Right	Thru	Left	Peds	App. Total	Right	Thru	Left	Peds	App. Total	Right	Thru	Left	Peds	App. Total	Int. Total
02:30 PM	42	178	9	0	229	6	11	10	0	27	5	183	24	0	212	41	13	57	0	111	579
02:45 PM	34	157	6	0	197	15	12	7	0	34	6	203	24	0	233	44	13	43	0	100	564
Total	76	335	15	0	426	21	23	17	0	61	11	386	48	0	445	85	26	100	0	211	1143
03:00 PM	43	171	11	0	225	9	16	13	0	38	5	217	35	0	257	34	13	46	0	93	613
03:15 PM	37	178	4	0	219	13	13	8	0	34	7	198	12	0	217	39	13	40	0	92	562
03:30 PM	39	185	9	0	233	22	6	17	0	45	7	194	28	0	229	26	23	42	0	91	598
03:45 PM	37	188	8	0	233	10	17	11	0	38	11	254	20	0	285	38	24	40	0	102	658
Total	156	722	32	0	910	54	52	49	0	155	30	863	95	0	988	137	73	168	0	378	2431
04:00 PM	31	183	6	0	220	13	17	17	0	47	4	197	26	0	227	34	28	35	0	97	591
04:15 PM	34	191	3	0	228	13	26	10	0	49	8	230	35	0	273	41	33	39	0	113	663
04:30 PM	26	171	16	0	213	9	21	10	0	40	7	213	52	0	272	47	32	45	0	124	649
04:45 PM	45	187	11	0	243	11	16	6	0	33	8	221	37	0	266	32	35	39	0	106	648
Total	136	732	36	0	904	46	80	43	0	169	27	861	150	0	1038	154	128	158	0	440	2551
05:00 PM	34	169	11	0	214	10	23	14	0	47	12	259	45	0	316	37	53	48	0	138	715
05:15 PM	43	200	11	0	254	8	27	12	0	47	10	267	31	0	308	30	29	42	1	102	711
05:30 PM	39	149	9	0	197	10	26	14	0	50	6	210	39	0	255	33	29	54	0	116	618
05:45 PM	46	169	7	0	222	13	33	13	0	59	10	239	29	0	278	29	14	34	0	77	636
Total	162	687	38	0	887	41	109	53	0	203	38	975	144	0	1157	129	125	178	1	433	2680
06:00 PM	44	156	13	0	213	20	16	17	0	53	7	220	41	0	268	32	26	45	0	103	637
06:15 PM	45	155	7	0	207	16	8	9	0	33	6	179	22	0	207	38	17	35	0	90	537
Grand Total	619	2787	141	0	3547	198	288	188	0	674	119	3484	500	0	4103	575	395	684	1	1655	9979
Apprch %	17.5	78.6	4	0		29.4	42.7	27.9	0		2.9	84.9	12.2	0		34.7	23.9	41.3	0.1		
Total %	6.2	27.9	1.4	0	35.5	2	2.9	1.9	0	6.8	1.2	34.9	5	0	41.1	5.8	4	6.9	0	16.6	

WSB & Associates

701 Xenia Ave S
Minneapolis, MN

York Ave & 69th St
2:30-6:30 pm
Edina, MN
90's

File Name : York Ave & 69th St
Site Code : 00000005
Start Date : 7/10/2012
Page No : 2

	From North					69th St From East					From South					69th St From West					
Start Time	Right	Thru	Left	Peds	App. Total	Right	Thru	Left	Peds	App. Total	Right	Thru	Left	Peds	App. Total	Right	Thru	Left	Peds	App. Total	Int. Total
Peak Hour Analysis From 02:30 PM to 06:15 PM - Peak 1 of 1																					
Peak Hour for Entire Intersection Begins at 04:30 PM																					
04:30 PM	26	171	16	0	213	9	21	10	0	40	7	213	52	0	272	47	32	45	0	124	649
04:45 PM	45	187	11	0	243	11	16	6	0	33	8	221	37	0	266	32	35	39	0	106	648
05:00 PM	34	169	11	0	214	10	23	14	0	47	12	259	45	0	316	37	53	48	0	138	715
05:15 PM	43	200	11	0	254	8	27	12	0	47	10	267	31	0	308	30	29	42	1	102	711
Total Volume	148	727	49	0	924	38	87	42	0	167	37	960	165	0	1162	146	149	174	1	470	2723
% App. Total	16	78.7	5.3	0		22.8	52.1	25.1	0		3.2	82.6	14.2	0		31.1	31.7	37	0.2		
PHF	.822	.909	.766	.000	.909	.864	.806	.750	.000	.888	.771	.899	.793	.000	.919	.777	.703	.906	.250	.851	.952

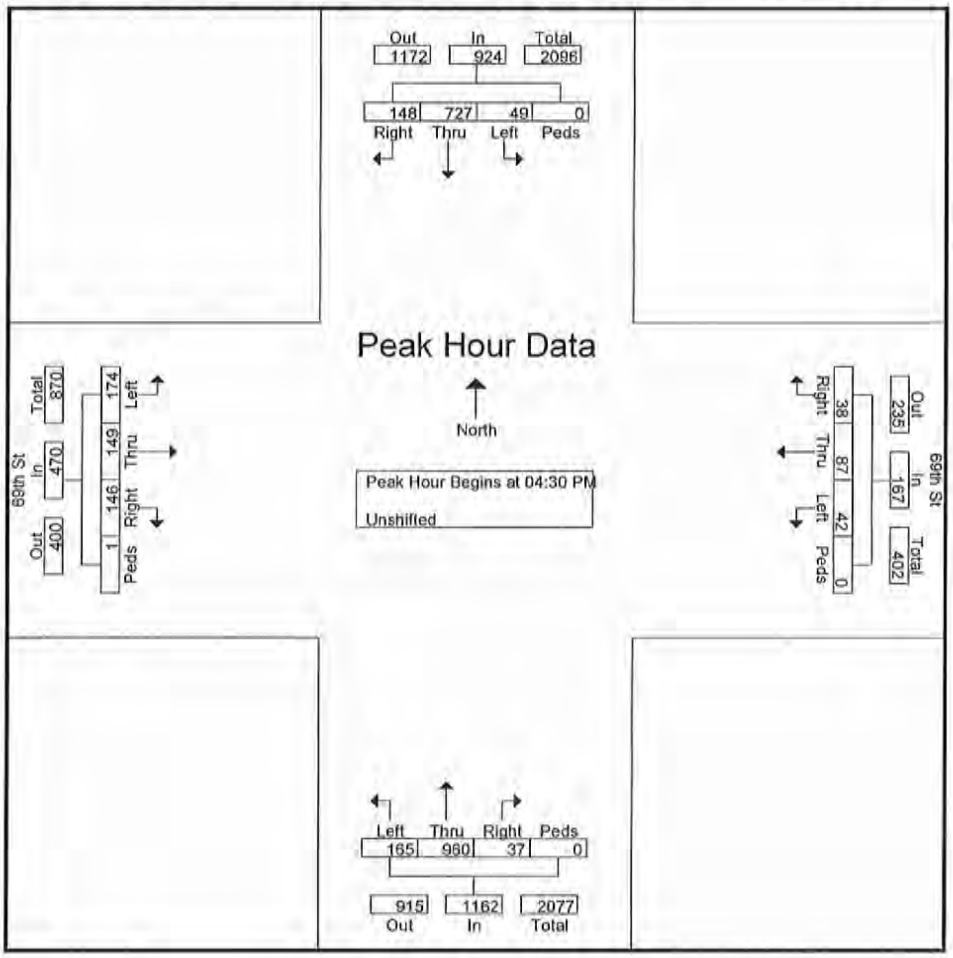

A107

WSB & Associates

701 Xenia Ave S
Minneapolis, MN

York Ave & 69th St
10:30-2:30
Edina, MN
pt cloudy

File Name : York Ave & 69th St-sat
Site Code : 00000005
Start Date : 7/21/2012
Page No : 1

Groups Printed- Unshifted

	York Ave From North					69th St From East					York Ave From South					69th St From West					
Start Time	Right	Thru	Left	Peds	App. Total	Right	Thru	Left	Peds	App. Total	Right	Thru	Left	Peds	App. Total	Right	Thru	Left	Peds	App. Total	Int. Total
10:30 AM	49	138	8	0	195	15	20	10	0	45	6	148	20	0	174	19	8	34	0	61	475
10:45 AM	35	183	7	0	225	12	12	15	0	39	8	179	33	0	220	26	14	37	0	77	561
Total	84	321	15	0	420	27	32	25	0	84	14	327	53	0	394	45	22	71	0	138	1036
11:00 AM	41	160	10	0	211	16	18	13	0	47	9	199	29	0	237	26	13	41	0	80	575
11:15 AM	43	156	3	0	202	15	11	14	0	40	8	197	28	0	233	27	21	40	0	88	563
11:30 AM	42	156	5	0	203	13	18	15	0	46	8	189	42	0	239	30	13	40	0	83	571
11:45 AM	44	231	10	0	285	8	18	14	0	40	1	244	35	0	280	55	16	44	0	115	720
Total	170	703	28	0	901	52	65	56	0	173	26	829	134	0	989	138	63	165	0	366	2429
12:00 PM	50	154	6	0	210	22	14	18	0	54	11	228	47	0	286	42	20	47	2	111	661
12:15 PM	59	187	10	0	256	15	10	8	0	33	7	254	21	0	282	47	17	41	0	105	676
12:30 PM	44	161	7	0	212	17	21	13	0	51	5	204	33	0	242	43	23	54	0	120	625
12:45 PM	42	179	9	0	230	20	15	7	0	42	4	235	21	0	260	31	14	53	0	98	630
Total	195	681	32	0	908	74	60	46	0	180	27	921	122	0	1070	163	74	195	2	434	2592
01:00 PM	51	146	8	0	205	17	15	12	0	44	5	212	31	0	248	42	21	56	0	119	616
01:15 PM	54	200	6	0	260	14	18	20	0	52	6	236	34	0	276	45	18	45	0	108	696
01:30 PM	56	162	6	0	224	21	19	12	0	52	7	203	44	0	254	37	21	63	0	121	651
01:45 PM	53	170	4	0	227	9	11	5	0	25	3	233	37	0	273	38	15	36	0	89	614
Total	214	678	24	0	916	61	63	49	0	173	21	884	146	0	1051	162	75	200	0	437	2577
02:00 PM	48	168	6	0	222	6	16	14	0	36	6	224	38	0	268	43	13	49	0	105	631
02:15 PM	54	196	8	0	258	15	9	18	0	42	5	261	53	0	319	41	27	58	3	129	748
Grand Total	765	2747	113	0	3625	235	245	208	0	688	99	3446	546	0	4091	592	274	738	5	1609	10013
Apprch %	21.1	75.8	3.1	0		34.2	35.6	30.2	0		2.4	84.2	13.3	0		36.8	17	45.9	0.3		
Total %	7.6	27.4	1.1	0	36.2	2.3	2.4	2.1	0	6.9	1	34.4	5.5	0	40.9	5.9	2.7	7.4	0	16.1	

A108

WSB & Associates

701 Xenia Ave S
Minneapolis, MN

York Ave & 69th St
10:30-2:30
Edina, MN
pt cloudy

File Name : York Ave & 69th St-sat
Site Code : 00000005
Start Date : 7/21/2012
Page No : 2

	York Ave From North					69th St From East					York Ave From South					69th St From West					
Start Time	Right	Thru	Left	Peds	App. Total	Right	Thru	Left	Peds	App. Total	Right	Thru	Left	Peds	App. Total	Right	Thru	Left	Peds	App. Total	Int. Total
Peak Hour Analysis From 10:30 AM to 02:15 PM - Peak 1 of 1																					
Peak Hour for Entire Intersection Begins at 11:45 AM																					
11:45 AM	44	**231**	**10**	0	**285**	8	18	14	0	40	1	244	35	0	280	**55**	16	44	0	115	**720**
12:00 PM	50	154	6	0	210	**22**	14	**18**	0	**54**	**11**	228	**47**	0	**286**	42	20	47	**2**	111	661
12:15 PM	**59**	187	10	0	256	15	10	8	0	33	7	**254**	21	0	282	47	17	41	0	105	676
12:30 PM	44	161	7	0	212	17	**21**	13	0	51	5	204	33	0	242	43	**23**	**54**	0	**120**	625
Total Volume	197	733	33	0	963	62	63	53	0	178	24	930	136	0	1090	187	76	186	2	451	2682
% App. Total	20.5	76.1	3.4	0		34.8	35.4	29.8	0		2.2	85.3	12.5	0		41.5	16.9	41.2	0.4		
PHF	.835	.793	.825	.000	.845	.705	.750	.736	.000	.824	.545	.915	.723	.000	.953	.850	.826	.861	.250	.940	.931

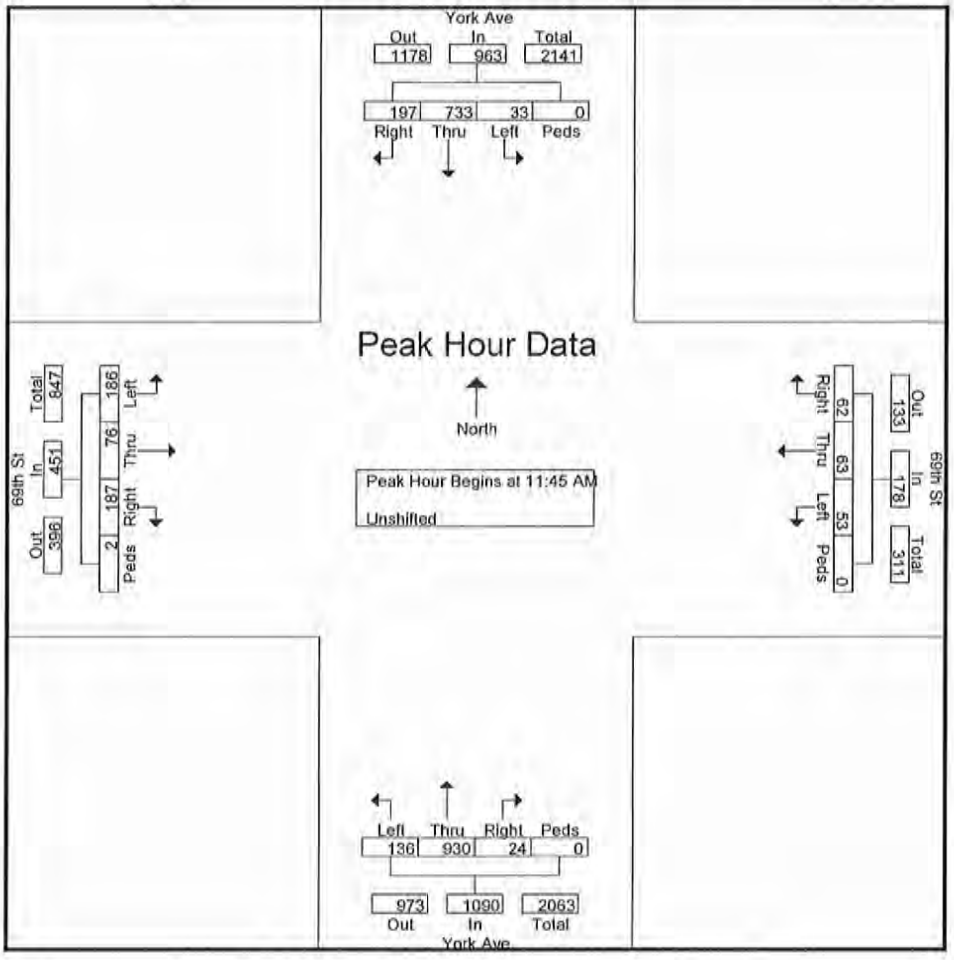

A104

WSB & Associates

701 Xenia Ave S
Minneapolis, MN

69th St & Southdale Ent-site 2
2:30-6:30 pm
Edina, MN
90's

File Name : 69th St & Southdale Ent-site 2
Site Code : 00000002
Start Date : 7/11/2012
Page No : 1

Groups Printed- Unshifted

	Southdale Ent From North					69th St From East					Entrance From South					69th St From West					
Start Time	Right	Thru	Left	Peds	App. Total	Right	Thru	Left	Peds	App. Total	Right	Thru	Left	Peds	App. Total	Right	Thru	Left	Peds	App. Total	Int. Total
02:30 PM	48	6	13	1	68	10	53	12	0	75	17	1	13	0	31	14	86	5	0	105	279
02:45 PM	37	2	19	0	58	11	57	14	0	82	15	2	11	0	28	8	92	0	2	102	270
Total	85	8	32	1	126	21	110	26	0	157	32	3	24	0	59	22	178	5	2	207	549
03:00 PM	41	2	22	0	65	13	57	9	2	81	7	2	11	0	20	4	87	0	1	92	258
03:15 PM	42	4	26	0	72	9	46	14	1	70	15	3	12	1	31	6	90	1	1	98	271
03:30 PM	42	5	23	0	70	17	37	4	0	58	10	0	16	0	26	4	101	0	0	105	259
03:45 PM	36	5	19	1	61	9	61	13	0	83	2	1	8	2	13	3	93	2	0	98	255
Total	161	16	90	1	268	48	201	40	3	292	34	6	47	3	90	17	371	3	2	393	1043
04:00 PM	38	3	39	1	81	14	49	16	0	79	8	2	6	3	19	1	109	1	0	111	290
04:15 PM	43	3	19	0	65	15	60	16	3	94	7	6	10	1	24	4	88	4	0	96	279
04:30 PM	35	2	28	0	65	18	60	12	1	91	10	0	6	3	19	10	102	0	0	112	287
04:45 PM	35	4	22	1	62	17	55	14	1	87	13	1	8	1	23	2	115	0	0	117	289
Total	151	12	108	2	273	64	224	58	5	351	38	9	30	8	85	17	414	5	0	436	1145
05:00 PM	53	1	28	0	82	9	43	4	1	57	12	0	5	2	19	4	136	0	0	140	298
05:15 PM	42	4	16	1	63	11	51	14	1	77	11	0	2	0	13	8	117	0	0	125	278
05:30 PM	43	2	17	0	62	11	56	26	0	93	10	0	6	0	16	3	124	0	0	127	298
05:45 PM	42	1	15	0	58	8	48	21	1	78	11	2	4	0	17	4	93	1	0	98	251
Total	180	8	76	1	265	39	198	65	3	305	44	2	17	2	65	19	470	1	0	490	1125
06:00 PM	47	5	19	1	72	12	39	16	0	67	12	2	13	1	28	6	116	0	0	122	289
06:15 PM	50	4	16	0	70	13	46	21	0	80	6	1	9	0	16	3	97	1	0	101	267
Grand Total	674	53	341	6	1074	197	818	226	11	1252	166	23	140	14	343	84	1646	15	4	1749	4418
Apprch %	62.8	4.9	31.8	0.6		15.7	65.3	18.1	0.9		48.4	6.7	40.8	4.1		4.8	94.1	0.9	0.2		
Total %	15.3	1.2	7.7	0.1	24.3	4.5	18.5	5.1	0.2	28.3	3.8	0.5	3.2	0.3	7.8	1.9	37.3	0.3	0.1	39.6	

A110

WSB & Associates

701 Xenia Ave S
Minneapolis, MN

69th St & Southdale Ent-site 2
2:30-6:30 pm
Edina, MN
90's

File Name : 69th St & Southdale Ent-site 2
Site Code : 00000002
Start Date : 7/11/2012
Page No : 2

	Southdale Ent From North					69th St From East					Entrance From South					69th St From West					
Start Time	Right	Thru	Left	Peds	App. Total	Right	Thru	Left	Peds	App. Total	Right	Thru	Left	Peds	App. Total	Right	Thru	Left	Peds	App. Total	Int. Total
Peak Hour Analysis From 02:30 PM to 06:15 PM - Peak 1 of 1																					
Peak Hour for Entire Intersection Begins at 04:45 PM																					
04:45 PM	35	4	22	1	62	17	55	14	1	87	13	1	8	1	23	2	115	0	0	117	289
05:00 PM	53	1	28	0	82	9	43	4	1	57	12	0	5	2	19	4	136	0	0	140	298
05:15 PM	42	4	16	1	63	11	51	14	1	77	11	0	2	0	13	8	117	0	0	125	278
05:30 PM	43	2	17	0	62	11	56	26	0	93	10	0	6	0	16	3	124	0	0	127	298
Total Volume	173	11	83	2	269	48	205	58	3	314	46	1	21	3	71	17	492	0	0	509	1163
% App. Total	64.3	4.1	30.9	0.7		15.3	65.3	18.5	1		64.8	1.4	29.6	4.2		3.3	96.7	0	0		
PHF	.816	.688	.741	.500	.820	.706	.915	.558	.750	.844	.885	.250	.656	.375	.772	.531	.904	.000	.000	.909	.976

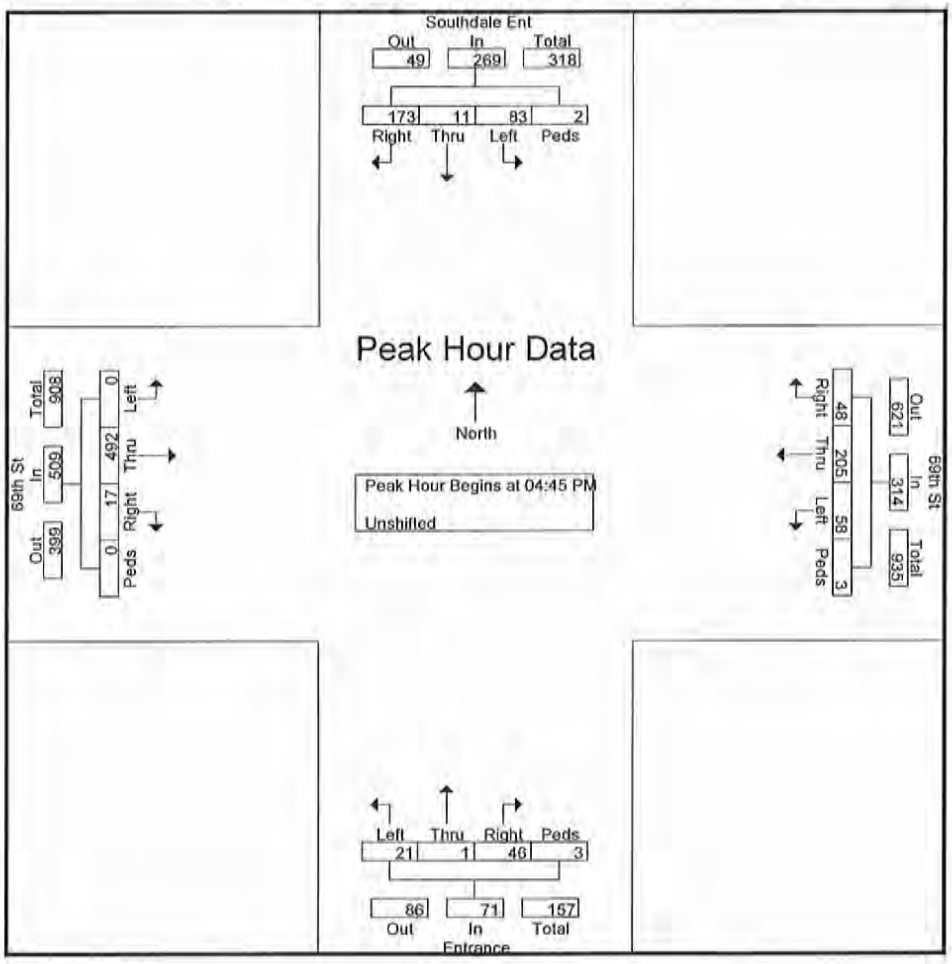

A111

WSB & Associates

701 Xenia Ave S
Minneapolis, MN

69th St & Southdale Ent-site 2
10:30-2:30
Edina, MN
pt cloudy

File Name : 69th St & Southdale Ent-site 2-sat
Site Code : 00000002
Start Date : 7/21/2012
Page No : 1

Groups Printed- Unshifted

	Southdale Ent From North					69th St From East					Entrance From South					69th St From West					
Start Time	Right	Thru	Left	Peds	App. Total	Right	Thru	Left	Peds	App. Total	Right	Thru	Left	Peds	App. Total	Right	Thru	Left	Peds	App. Total	Int. Total
10:30 AM	18	2	8	0	28	18	30	14	0	62	7	2	6	0	15	8	76	2	0	86	191
10:45 AM	19	2	8	0	29	10	32	15	0	57	12	5	9	0	26	9	107	1	0	117	229
Total	37	4	16	0	57	28	62	29	0	119	19	7	15	0	41	17	183	3	0	203	420
11:00 AM	20	2	18	0	40	15	34	10	0	59	8	5	10	0	23	6	92	2	0	100	222
11:15 AM	20	2	15	0	37	16	34	19	0	69	12	2	5	0	19	8	105	2	0	115	240
11:30 AM	34	4	11	0	49	23	39	14	0	76	11	2	8	0	21	9	107	1	0	117	263
11:45 AM	52	8	31	0	91	26	37	20	0	83	17	3	9	0	29	7	124	1	0	132	335
Total	126	16	75	0	217	80	144	63	0	287	48	12	32	0	92	30	428	6	0	464	1060
12:00 PM	40	6	26	0	72	18	29	23	0	70	15	3	8	0	26	4	113	0	0	117	285
12:15 PM	39	5	24	0	68	22	42	17	0	81	17	4	17	0	38	7	129	1	0	137	324
12:30 PM	59	2	33	0	94	16	41	16	0	73	17	3	11	0	31	3	108	0	0	111	309
12:45 PM	50	10	28	0	88	14	46	13	0	73	16	1	9	0	26	10	132	0	0	142	329
Total	188	23	111	0	322	70	158	69	0	297	65	11	45	0	121	24	482	1	0	507	1247
01:00 PM	46	5	26	0	77	17	55	17	0	89	14	3	6	0	23	7	151	0	0	158	347
01:15 PM	44	4	21	0	69	30	38	28	0	96	13	0	14	0	27	8	122	2	0	132	324
01:30 PM	67	8	33	0	108	18	56	19	0	93	16	4	6	0	26	7	113	3	0	123	350
01:45 PM	53	5	18	0	76	30	43	19	0	92	13	1	13	0	27	4	129	1	0	134	329
Total	210	22	98	0	330	95	192	83	0	370	56	8	39	0	103	26	515	6	0	547	1350
02:00 PM	50	4	28	0	82	18	44	17	0	79	13	3	8	0	24	7	94	2	0	103	288
02:15 PM	49	10	43	0	102	36	47	26	0	109	20	3	10	0	33	8	113	4	0	125	369
Grand Total	660	79	371	0	1110	327	647	287	0	1261	221	44	149	0	414	112	1815	22	0	1949	4734
Apprch %	59.5	7.1	33.4	0		25.9	51.3	22.8	0		53.4	10.6	36	0		5.7	93.1	1.1	0		
Total %	13.9	1.7	7.8	0	23.4	6.9	13.7	6.1	0	26.6	4.7	0.9	3.1	0	8.7	2.4	38.3	0.5	0	41.2	

WSB & Associates

701 Xenia Ave S
Minneapolis, MN

69th St & Southdale Ent-site 2
10:30-2:30
Edina, MN
pt cloudy

File Name : 69th St & Southdale Ent-site 2-sat
Site Code : 00000002
Start Date : 7/21/2012
Page No : 2

	Southdale Ent From North					69th St From East					Entrance From South					69th St From West					
Start Time	Right	Thru	Left	Peds	App. Total	Right	Thru	Left	Peds	App. Total	Right	Thru	Left	Peds	App. Total	Right	Thru	Left	Peds	App. Total	Int. Total
Peak Hour Analysis From 10:30 AM to 02:15 PM - Peak 1 of 1																					
Peak Hour for Entire Intersection Begins at 12:45 PM																					
12:45 PM	50	10	28	0	88	14	46	13	0	73	16	1	9	0	26	10	132	0	0	142	329
01:00 PM	46	5	26	0	77	17	55	17	0	89	14	3	6	0	23	7	151	0	0	158	347
01:15 PM	44	4	21	0	69	30	38	28	0	96	13	0	14	0	27	8	122	2	0	132	324
01:30 PM	67	8	33	0	108	18	56	19	0	93	16	4	6	0	26	7	113	3	0	123	350
Total Volume	207	27	108	0	342	79	195	77	0	351	59	8	35	0	102	32	518	5	0	555	1350
% App. Total	60.5	7.9	31.6	0		22.5	55.6	21.9	0		57.8	7.8	34.3	0		5.8	93.3	0.9	0		
PHF	.772	.675	.818	.000	.792	.658	.871	.688	.000	.914	.922	.500	.625	.000	.944	.800	.858	.417	.000	.878	.964

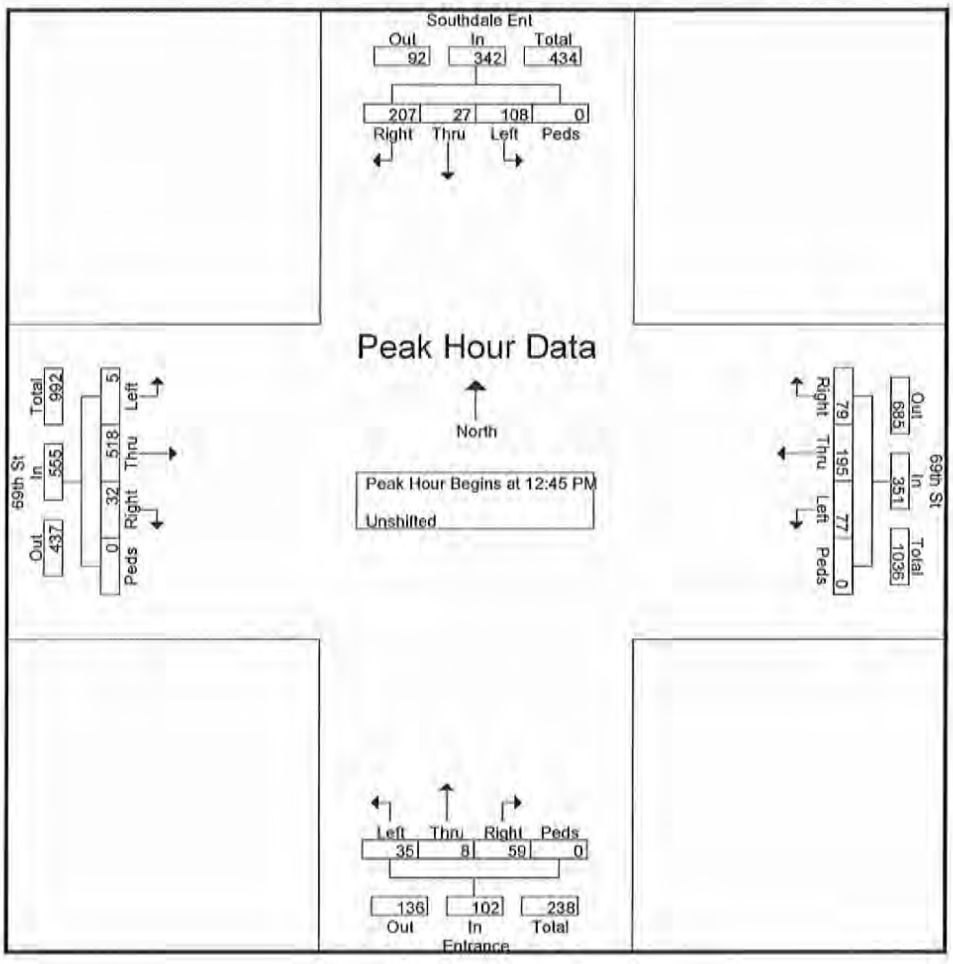

A113

WSB & Associates

701 Xenia Ave S
Minneapolis, MN

69th St & Southdale Ent-site 3
2:30-6:30 pm
Edina, MN
90's

File Name : 69th St & Southdale Ent-site 3
Site Code : 00000003
Start Date : 7/10/2012
Page No : 1

Groups Printed- Unshifted

	Southdale Ent From North					69th St From East					Entrance From South					69th St From West					
Start Time	Right	Thru	Left	Peds	App. Total	Right	Thru	Left	Peds	App. Total	Right	Thru	Left	Peds	App. Total	Right	Thru	Left	Peds	App. Total	Int. Total
02:30 PM	8	0	0	1	9	8	43	18	2	71	23	0	1	0	24	8	77	43	0	128	232
02:45 PM	18	0	0	0	18	7	37	19	1	64	17	0	0	2	19	10	91	31	3	135	236
Total	26	0	0	1	27	15	80	37	3	135	40	0	1	2	43	18	168	74	3	263	468
03:00 PM	7	0	0	0	7	7	45	26	2	80	12	0	0	0	12	12	65	37	2	116	215
03:15 PM	13	0	0	0	13	3	38	21	1	63	19	0	1	0	20	10	79	37	1	127	223
03:30 PM	10	0	0	0	10	10	40	14	1	65	18	0	1	0	19	17	71	29	1	118	212
03:45 PM	6	0	0	0	6	9	48	12	1	70	22	0	0	1	23	7	82	38	4	131	230
Total	36	0	0	0	36	29	171	73	5	278	71	0	2	1	74	46	297	141	8	492	880
04:00 PM	9	0	0	0	9	13	49	7	1	70	19	0	0	1	20	14	81	33	4	132	231
04:15 PM	9	0	0	0	9	15	63	11	1	90	23	0	0	0	23	12	92	35	1	140	262
04:30 PM	10	0	0	0	10	15	53	22	1	91	25	0	0	0	25	13	98	50	4	165	291
04:45 PM	8	0	0	1	9	14	55	23	2	94	19	0	0	1	20	24	94	44	0	162	285
Total	36	0	0	1	37	57	220	63	5	345	86	0	0	2	88	63	365	162	9	599	1069
05:00 PM	10	0	0	0	10	19	58	13	1	91	20	0	0	2	22	9	105	41	1	156	279
05:15 PM	14	0	0	0	14	7	64	16	0	87	23	0	0	1	24	11	91	50	5	157	282
05:30 PM	7	0	0	0	7	7	64	27	2	100	22	0	2	0	24	21	82	38	1	142	273
05:45 PM	14	0	0	0	14	13	62	21	0	96	15	0	0	0	15	7	69	47	2	125	250
Total	45	0	0	0	45	46	248	77	3	374	80	0	2	3	85	48	347	176	9	580	1084
06:00 PM	10	0	0	11	21	15	71	16	0	102	23	0	2	1	26	12	74	40	3	129	278
06:15 PM	13	0	0	1	14	16	40	13	0	69	24	0	0	0	24	15	80	49	4	148	255
Grand Total	166	0	0	14	180	178	830	279	16	1303	324	0	7	9	340	202	1331	642	36	2211	4034
Apprch %	92.2	0	0	7.8		13.7	63.7	21.4	1.2		95.3	0	2.1	2.6		9.1	60.2	29	1.6		
Total %	4.1	0	0	0.3	4.5	4.4	20.6	6.9	0.4	32.3	8	0	0.2	0.2	8.4	5	33	15.9	0.9	54.8	

WSB & Associates

701 Xenia Ave S
Minneapolis, MN

69th St & Southdale Ent-site 3
2:30-6:30 pm
Edina, MN
90's

File Name : 69th St & Southdale Ent-site 3
Site Code : 00000003
Start Date : 7/10/2012
Page No : 2

	Southdale Ent From North					69th St From East					Entrance From South					69th St From West					
Start Time	Right	Thru	Left	Peds	App. Total	Right	Thru	Left	Peds	App. Total	Right	Thru	Left	Peds	App. Total	Right	Thru	Left	Peds	App. Total	Int. Total
Peak Hour Analysis From 02:30 PM to 06:15 PM - Peak 1 of 1																					
Peak Hour for Entire Intersection Begins at 04:30 PM																					
04:30 PM	10	0	0	0	10	15	53	22	1	91	25	0	0	0	25	13	98	50	4	165	291
04:45 PM	8	0	0	1	9	14	55	23	2	94	19	0	0	1	20	24	94	44	0	162	285
05:00 PM	10	0	0	0	10	19	58	13	1	91	20	0	0	2	22	9	105	41	1	156	279
05:15 PM	14	0	0	0	14	7	64	16	0	87	23	0	0	1	24	11	91	50	5	157	282
Total Volume	42	0	0	1	43	55	230	74	4	363	87	0	0	4	91	57	388	185	10	640	1137
% App. Total	97.7	0	0	2.3		15.2	63.4	20.4	1.1		95.6	0	0	4.4		8.9	60.6	28.9	1.6		
PHF	.750	.000	.000	.250	.768	.724	.898	.804	.500	.965	.870	.000	.000	.500	.910	.594	.924	.925	.500	.970	.977

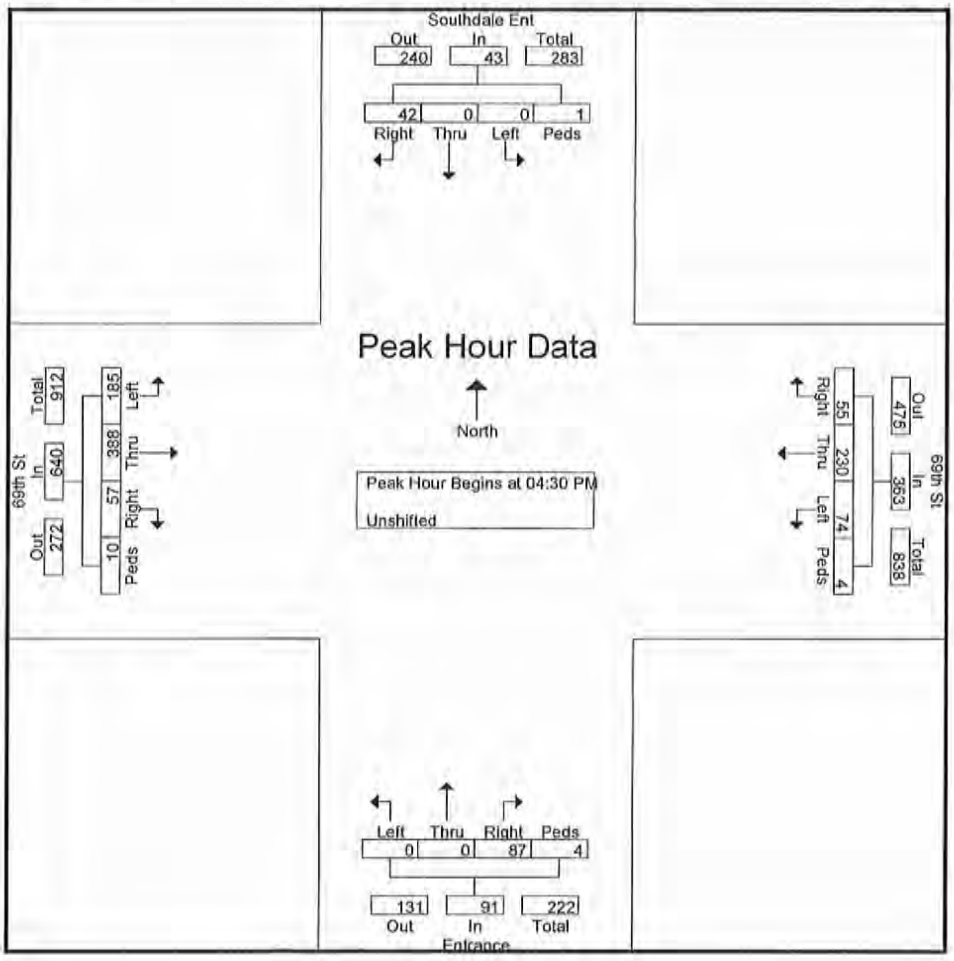

A115

WSB & Associates

701 Xenia Ave S
Minneapolis, MN

69th St & Southdale Ent-site 4
2:30-6:30 pm
Edina, MN
90's

File Name : 69th St & Southdale Ent-site 4
Site Code : 00000004
Start Date : 7/10/2012
Page No : 1

Groups Printed- Unshifted

	Southdale Ent From North					69th St From East					From South					69th St From West					
Start Time	Right	Thru	Left	Peds	App. Total	Right	Thru	Left	Peds	App. Total	Right	Thru	Left	Peds	App. Total	Right	Thru	Left	Peds	App. Total	Int. Total
02:30 PM	0	0	0	0	0	6	0	0	0	6	0	0	0	0	0	0	0	0	0	0	6
02:45 PM	0	0	0	0	0	7	0	0	0	7	0	0	0	0	0	0	0	0	0	0	7
Total	0	0	0	0	0	13	0	0	0	13	0	0	0	0	0	0	0	0	0	0	13
03:00 PM	0	0	0	0	0	12	0	0	0	12	0	0	0	0	0	0	0	0	0	0	12
03:15 PM	0	0	0	0	0	1	0	0	0	1	0	0	0	0	0	0	0	0	0	0	1
03:30 PM	0	0	0	0	0	8	0	0	0	8	0	0	0	0	0	0	0	0	0	0	8
03:45 PM	0	0	0	0	0	2	0	0	0	2	0	0	0	0	0	0	0	0	0	0	2
Total	0	0	0	0	0	23	0	0	0	23	0	0	0	0	0	0	0	0	0	0	23
04:00 PM	0	0	0	0	0	5	0	0	0	5	0	0	0	0	0	0	0	0	0	0	5
04:15 PM	0	0	0	0	0	4	0	0	0	4	0	0	0	0	0	0	0	0	0	0	4
04:30 PM	0	0	0	0	0	10	0	0	0	10	0	0	0	0	0	0	0	0	0	0	10
04:45 PM	0	0	0	0	0	7	0	0	0	7	0	0	0	0	0	0	0	0	0	0	7
Total	0	0	0	0	0	26	0	0	0	26	0	0	0	0	0	0	0	0	0	0	26
05:00 PM	0	0	0	0	0	13	0	0	0	13	0	0	0	0	0	0	0	0	0	0	13
05:15 PM	0	0	0	0	0	13	0	0	0	13	0	0	0	0	0	0	0	0	0	0	13
05:30 PM	0	0	0	0	0	10	0	0	0	10	0	0	0	0	0	0	0	0	0	0	10
05:45 PM	0	0	0	0	0	12	0	0	0	12	0	0	0	0	0	0	0	0	0	0	12
Total	0	0	0	0	0	48	0	0	0	48	0	0	0	0	0	0	0	0	0	0	48
06:00 PM	0	0	0	0	0	9	0	0	0	9	0	0	0	0	0	0	0	0	0	0	9
06:15 PM	0	0	0	0	0	9	0	0	0	9	0	0	0	0	0	0	0	0	0	0	9
Grand Total	0	0	0	0	0	128	0	0	0	128	0	0	0	0	0	0	0	0	0	0	128
Apprch %	0	0	0	0		100	0	0	0		0	0	0	0		0	0	0	0		
Total %	0	0	0	0	0	100	0	0	0	100	0	0	0	0	0	0	0	0	0	0	

WSB & Associates

701 Xenia Ave S
Minneapolis, MN

69th St & Southdale Ent-site 4
2:30-6:30 pm
Edina, MN
90's

File Name : 69th St & Southdale Ent-site 4
Site Code : 00000004
Start Date : 7/10/2012

	Southdale Ent From North					69th St From East					From South					69th St From West					
Start Time	Right	Thru	Left	Peds	App. Total	Right	Thru	Left	Peds	App. Total	Right	Thru	Left	Peds	App. Total	Right	Thru	Left	Peds	App. Total	Int. Total
Peak Hour Analysis From 02:30 PM to 06:15 PM - Peak 1 of 1																					
Peak Hour for Entire Intersection Begins at 05:00 PM																					
05:00 PM	0	0	0	0	0	13	0	0	0	13	0	0	0	0	0	0	0	0	0	0	13
05:15 PM	0	0	0	0	0	13	0	0	0	13	0	0	0	0	0	0	0	0	0	0	13
05:30 PM	0	0	0	0	0	10	0	0	0	10	0	0	0	0	0	0	0	0	0	0	10
05:45 PM	0	0	0	0	0	12	0	0	0	12	0	0	0	0	0	0	0	0	0	0	12
Total Volume	0	0	0	0	0	48	0	0	0	48	0	0	0	0	0	0	0	0	0	0	48
% App. Total	0	0	0	0		100	0	0	0		0	0	0	0		0	0	0	0		
PHF	.000	.000	.000	.000	.000	.923	.000	.000	.000	.923	.000	.000	.000	.000	.000	.000	.000	.000	.000	.000	.923

A117

WSB & Associates

701 Xenia Ave S
Minneapolis, MN

69th St & Southdale Ent-site 4
10:30-2:30
Edina, MN
pt cloudy

File Name : 69th St & Southdale Ent-site 4-sat
Site Code : 00000004
Start Date : 7/21/2012
Page No : 1

Groups Printed- Unshifted

	Southdale Ent From North					69th St From East					From South					69th St From West					
Start Time	Right	Thru	Left	Peds	App. Total	Right	Thru	Left	Peds	App. Total	Right	Thru	Left	Peds	App. Total	Right	Thru	Left	Peds	App. Total	Int. Total
10:30 AM	0	0	0	0	0	13	0	0	0	13	0	0	0	0	0	0	0	0	0	0	13
10:45 AM	0	0	0	0	0	12	0	0	0	12	0	0	0	0	0	0	0	0	0	0	12
Total	0	0	0	0	0	25	0	0	0	25	0	0	0	0	0	0	0	0	0	0	25
11:00 AM	0	0	0	0	0	10	0	0	0	10	0	0	0	0	0	0	0	0	0	0	10
11:15 AM	0	0	0	0	0	3	0	0	0	3	0	0	0	0	0	0	0	0	0	0	3
11:30 AM	0	0	0	0	0	23	0	0	0	23	0	0	0	0	0	0	0	0	0	0	23
11:45 AM	0	0	0	0	0	7	0	0	0	7	0	0	0	0	0	0	0	0	0	0	7
Total	0	0	0	0	0	43	0	0	0	43	0	0	0	0	0	0	0	0	0	0	43
12:00 PM	0	0	0	0	0	26	0	0	0	26	0	0	0	0	0	0	0	0	0	0	26
12:15 PM	0	0	0	0	0	7	0	0	0	7	0	0	0	0	0	0	0	0	0	0	7
12:30 PM	0	0	0	0	0	27	0	0	0	27	0	0	0	0	0	0	0	0	0	0	27
12:45 PM	0	0	0	0	0	4	0	0	0	4	0	0	0	0	0	0	0	0	0	0	4
Total	0	0	0	0	0	64	0	0	0	64	0	0	0	0	0	0	0	0	0	0	64
01:00 PM	0	0	0	0	0	9	0	0	0	9	0	0	0	0	0	0	0	0	0	0	9
01:15 PM	0	0	0	0	0	4	0	0	0	4	0	0	0	0	0	0	0	0	0	0	4
01:30 PM	0	0	0	0	0	14	0	0	0	14	0	0	0	0	0	0	0	0	0	0	14
01:45 PM	0	0	0	0	0	10	0	0	0	10	0	0	0	0	0	0	0	0	0	0	10
Total	0	0	0	0	0	37	0	0	0	37	0	0	0	0	0	0	0	0	0	0	37
02:00 PM	0	0	0	0	0	23	0	0	0	23	0	0	0	0	0	0	0	0	0	0	23
02:15 PM	0	0	0	0	0	16	0	0	0	16	0	0	0	0	0	0	0	0	0	0	16
Grand Total	0	0	0	0	0	208	0	0	0	208	0	0	0	0	0	0	0	0	0	0	208
Apprch %	0	0	0	0		100	0	0	0		0	0	0	0		0	0	0	0		
Total %	0	0	0	0	0	100	0	0	0	100	0	0	0	0	0	0	0	0	0	0	

A118

WSB & Associates

701 Xenia Ave S
Minneapolis, MN

69th St & Southdale Ent-site 4
10:30-2:30
Edina, MN
pt cloudy

File Name : 69th St & Southdale Ent-site 4-sat
Site Code : 00000004
Start Date : 7/21/2012
Page No : 2

	Southdale Ent From North					69th St From East					From South					69th St From West					
Start Time	Right	Thru	Left	Peds	App. Total	Right	Thru	Left	Peds	App. Total	Right	Thru	Left	Peds	App. Total	Right	Thru	Left	Peds	App. Total	Int. Total
Peak Hour Analysis From 10:30 AM to 02:15 PM - Peak 1 of 1																					
Peak Hour for Entire Intersection Begins at 11:45 AM																					
11:45 AM	0	0	0	0	0	7	0	0	0	7	0	0	0	0	0	0	0	0	0	0	7
12:00 PM	0	0	0	0	0	26	0	0	0	26	0	0	0	0	0	0	0	0	0	0	26
12:15 PM	0	0	0	0	0	7	0	0	0	7	0	0	0	0	0	0	0	0	0	0	7
12:30 PM	0	0	0	0	0	**27**	0	0	0	**27**	0	0	0	0	0	0	0	0	0	0	**27**
Total Volume	0	0	0	0	0	67	0	0	0	67	0	0	0	0	0	0	0	0	0	0	67
% App. Total	0	0	0	0		100	0	0	0		0	0	0	0		0	0	0	0		
PHF	.000	.000	.000	.000	.000	.620	.000	.000	.000	.620	.000	.000	.000	.000	.000	.000	.000	.000	.000	.000	.620

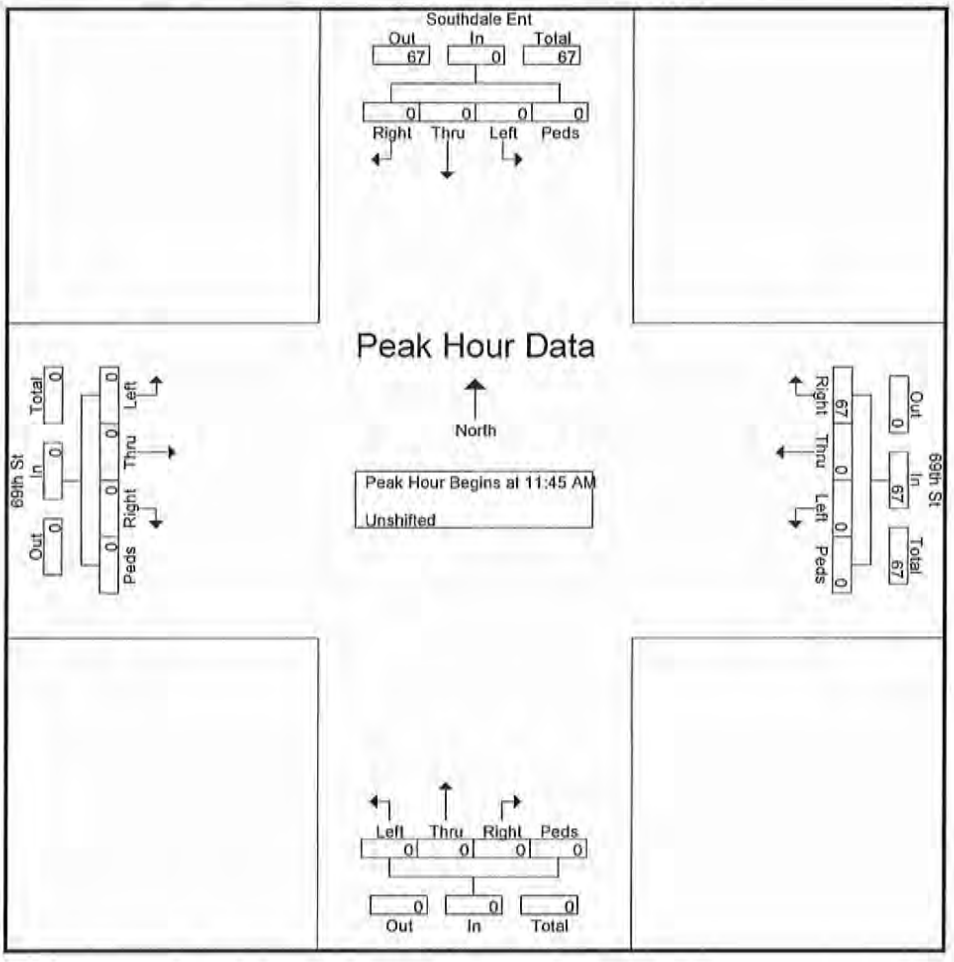

A119

WSB & Associates

701 Xenia Ave S
Minneapolis, MN

France Ave & 69th St
2:30-6:30 pm
Edina, MN
90's

File Name : France Ave & 69th st
Site Code : 00000001
Start Date : 7/11/2012
Page No : 1

Groups Printed- Unshifted

	France Ave From North					69th St From East					France Ave From South					69th St From West					
Start Time	Right	Thru	Left	Peds	App. Total	Right	Thru	Left	Peds	App. Total	Right	Thru	Left	Peds	App. Total	Right	Thru	Left	Peds	App. Total	Int. Total
02:30 PM	5	172	28	0	205	29	24	46	0	99	52	270	31	0	353	43	39	10	1	93	750
02:45 PM	7	177	21	0	205	24	32	63	0	119	42	256	35	0	333	49	43	12	0	104	761
Total	12	349	49	0	410	53	56	109	0	218	94	526	66	0	686	92	82	22	1	197	1511
03:00 PM	5	181	22	0	208	28	22	47	0	97	46	257	48	0	351	51	31	8	0	90	746
03:15 PM	6	182	27	0	215	21	27	59	0	107	31	251	38	0	320	40	42	9	0	91	733
03:30 PM	8	207	26	0	241	20	26	41	0	87	43	279	42	0	364	48	43	8	1	100	792
03:45 PM	8	182	17	0	207	21	42	54	0	117	42	222	39	0	303	46	41	14	0	101	728
Total	27	752	92	0	871	90	117	201	0	408	162	1009	167	0	1338	185	157	39	1	382	2999
04:00 PM	7	180	22	0	209	15	38	36	0	89	43	293	42	0	378	38	38	11	0	87	763
04:15 PM	8	173	18	0	199	20	34	52	0	106	36	265	47	0	348	47	47	13	0	107	760
04:30 PM	12	194	29	0	235	24	43	38	0	105	49	296	37	0	382	40	47	6	1	94	816
04:45 PM	9	192	24	0	225	22	34	42	0	98	41	254	41	1	337	58	62	16	1	137	797
Total	36	739	93	0	868	81	149	168	0	398	169	1108	167	1	1445	183	194	46	2	425	3136
05:00 PM	8	175	27	0	210	19	37	39	0	95	60	318	53	0	431	46	50	8	5	109	845
05:15 PM	1	187	32	0	220	23	49	29	0	101	54	321	44	0	419	41	50	5	0	96	836
05:30 PM	4	158	31	0	193	15	33	43	0	91	63	287	42	0	392	47	46	11	0	104	780
05:45 PM	7	183	17	0	207	25	36	39	0	100	52	257	33	0	342	33	41	7	0	81	730
Total	20	703	107	0	830	82	155	150	0	387	229	1183	172	0	1584	167	187	31	5	390	3191
06:00 PM	5	180	23	0	208	20	34	39	0	93	68	263	38	0	369	45	46	13	0	104	774
06:15 PM	4	177	26	0	207	30	30	53	0	113	52	263	38	0	353	50	44	4	0	98	771
Grand Total	104	2900	390	0	3394	356	541	720	0	1617	774	4352	648	1	5775	722	710	155	9	1596	12382
Apprch %	3.1	85.4	11.5	0		22	33.5	44.5	0		13.4	75.4	11.2	0		45.2	44.5	9.7	0.6		
Total %	0.8	23.4	3.1	0	27.4	2.9	4.4	5.8	0	13.1	6.3	35.1	5.2	0	46.6	5.8	5.7	1.3	0.1	12.9	

A12 6

WSB & Associates

701 Xenia Ave S
Minneapolis, MN

France Ave & 69th St
2:30-6:30 pm
Edina, MN
90's

File Name : France Ave & 69th st
Site Code : 00000001
Start Date : 7/11/2012
Page No : 2

	France Ave From North					69th St From East					France Ave From South					69th St From West					
Start Time	Right	Thru	Left	Peds	App. Total	Right	Thru	Left	Peds	App. Total	Right	Thru	Left	Peds	App. Total	Right	Thru	Left	Peds	App. Total	Int. Total
Peak Hour Analysis From 02:30 PM to 06:15 PM - Peak 1 of 1																					
Peak Hour for Entire Intersection Begins at 04:30 PM																					
04:30 PM	**12**	**194**	29	0	**235**	**24**	43	38	0	**105**	49	296	37	0	382	40	47	6	1	94	816
04:45 PM	9	192	24	0	225	22	34	**42**	0	98	41	254	41	1	337	**58**	**62**	**16**	1	**137**	797
05:00 PM	8	175	27	0	210	19	37	39	0	95	**60**	318	**53**	0	**431**	46	50	8	**5**	109	**845**
05:15 PM	1	187	**32**	0	220	23	**49**	29	0	101	54	**321**	44	0	419	41	50	5	0	96	836
Total Volume	30	748	112	0	890	88	163	148	0	399	204	1189	175	1	1569	185	209	35	7	436	3294
% App. Total	3.4	84	12.6	0		22.1	40.9	37.1	0		13	75.8	11.2	0.1		42.4	47.9	8	1.6		
PHF	.625	.964	.875	.000	.947	.917	.832	.881	.000	.950	.850	.926	.825	.250	.910	.797	.843	.547	.350	.796	.975

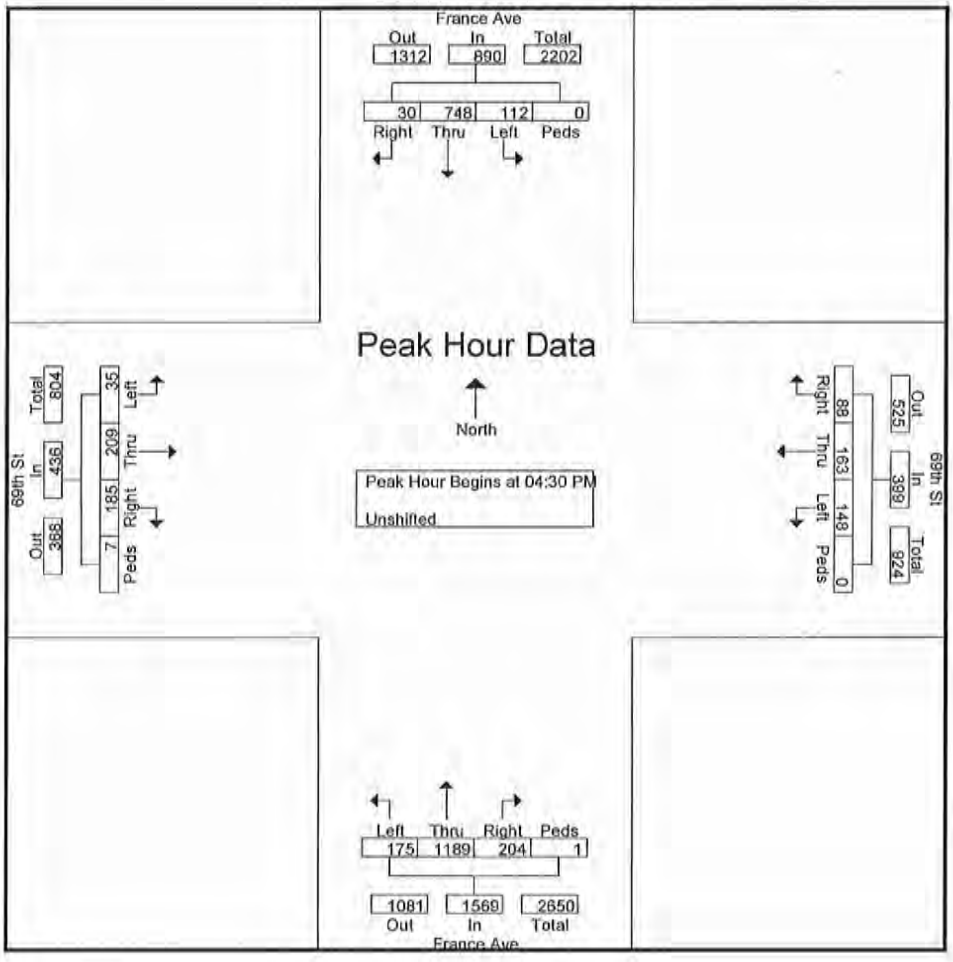

A121

WSB & Associates

701 Xenia Ave S
Minneapolis, MN

France Ave & 69th St
10:30-6:30
Edina, MN
pt cloudy

File Name : France Ave & 69th st-sat
Site Code : 00000001
Start Date : 7/21/2012
Page No : 1

Groups Printed- Unshifted

	France Ave From North					69th St From East					France Ave From South					69th St From West					
Start Time	Right	Thru	Left	Peds	App. Total	Right	Thru	Left	Peds	App. Total	Right	Thru	Left	Peds	App. Total	Right	Thru	Left	Peds	App. Total	Int. Total
10:30 AM	0	101	25	0	126	15	16	27	0	58	45	191	20	0	256	48	46	14	0	108	548
10:45 AM	20	95	35	0	150	14	13	26	0	53	61	244	25	0	330	45	42	1	0	88	621
Total	20	196	60	0	276	29	29	53	0	111	106	435	45	0	586	93	88	15	0	196	1169
11:00 AM	0	137	24	0	161	17	18	30	0	65	48	232	19	0	299	37	37	12	0	86	611
11:15 AM	3	123	30	0	156	18	20	26	0	64	63	232	34	0	329	42	30	6	0	78	627
11:30 AM	8	151	34	0	193	21	22	37	0	80	52	286	34	0	372	27	58	15	1	101	746
11:45 AM	4	157	35	0	196	25	14	56	0	95	61	283	29	0	373	54	49	15	0	118	782
Total	15	568	123	0	706	81	74	149	0	304	224	1033	116	0	1373	160	174	48	1	383	2766
12:00 PM	3	154	28	0	185	24	26	42	0	92	63	284	17	0	364	28	32	12	0	72	713
12:15 PM	4	126	37	0	167	24	21	44	0	89	52	294	31	0	377	35	61	6	0	102	735
12:30 PM	2	161	28	0	191	45	25	46	0	116	51	262	28	0	341	24	29	10	0	63	711
12:45 PM	13	150	37	0	200	24	29	45	0	98	90	350	22	0	462	38	45	6	0	89	849
Total	22	591	130	0	743	117	101	177	0	395	256	1190	98	0	1544	125	167	34	0	326	3008
01:00 PM	16	123	29	0	168	35	37	40	0	112	106	279	22	0	407	43	47	8	0	98	785
01:15 PM	12	154	49	0	215	36	25	33	0	94	61	326	25	0	412	50	31	9	0	90	811
01:30 PM	8	138	27	0	173	45	35	51	0	131	55	251	16	0	322	20	51	10	3	84	710
01:45 PM	7	146	33	0	186	35	13	53	0	101	60	348	38	0	446	29	36	5	0	70	803
Total	43	561	138	0	742	151	110	177	0	438	282	1204	101	0	1587	142	165	32	3	342	3109
02:00 PM	4	135	40	0	179	37	25	55	0	117	47	238	21	0	306	37	34	10	0	81	683
02:15 PM	7	148	32	0	187	33	11	43	0	87	44	257	34	0	335	31	28	7	0	66	675
Grand Total	111	2199	523	0	2833	448	350	654	0	1452	959	4357	415	0	5731	588	656	146	4	1394	11410
Apprch %	3.9	77.6	18.5	0		30.9	24.1	45	0		16.7	76	7.2	0		42.2	47.1	10.5	0.3		
Total %	1	19.3	4.6	0	24.8	3.9	3.1	5.7	0	12.7	8.4	38.2	3.6	0	50.2	5.2	5.7	1.3	0	12.2	

A122

WSB & Associates

701 Xenia Ave S
Minneapolis, MN

France Ave & 69th St
10:30-6:30
Edina, MN
pt cloudy

File Name : France Ave & 69th st-sat
Site Code : 00000001
Start Date : 7/21/2012
Page No : 2

	France Ave From North					69th St From East					France Ave From South					69th St From West					
Start Time	Right	Thru	Left	Peds	App. Total	Right	Thru	Left	Peds	App. Total	Right	Thru	Left	Peds	App. Total	Right	Thru	Left	Peds	App. Total	Int. Total
Peak Hour Analysis From 10:30 AM to 02:15 PM - Peak 1 of 1																					
Peak Hour for Entire Intersection Begins at 12:30 PM																					
12:30 PM	2	161	28	0	191	45	25	46	0	116	51	262	28	0	341	24	29	10	0	63	711
12:45 PM	13	150	37	0	200	24	29	45	0	98	90	350	22	0	462	38	45	6	0	89	849
01:00 PM	16	123	29	0	168	35	37	40	0	112	106	279	22	0	407	43	47	8	0	98	785
01:15 PM	12	154	49	0	215	36	25	33	0	94	61	326	25	0	412	50	31	9	0	90	811
Total Volume	43	588	143	0	774	140	116	164	0	420	308	1217	97	0	1622	155	152	33	0	340	3156
% App. Total	5.6	76	18.5	0		33.3	27.6	39	0		19	75	6	0		45.6	44.7	9.7	0		
PHF	.672	.913	.730	.000	.900	.778	.784	.891	.000	.905	.726	.869	.866	.000	.878	.775	.809	.825	.000	.867	.929

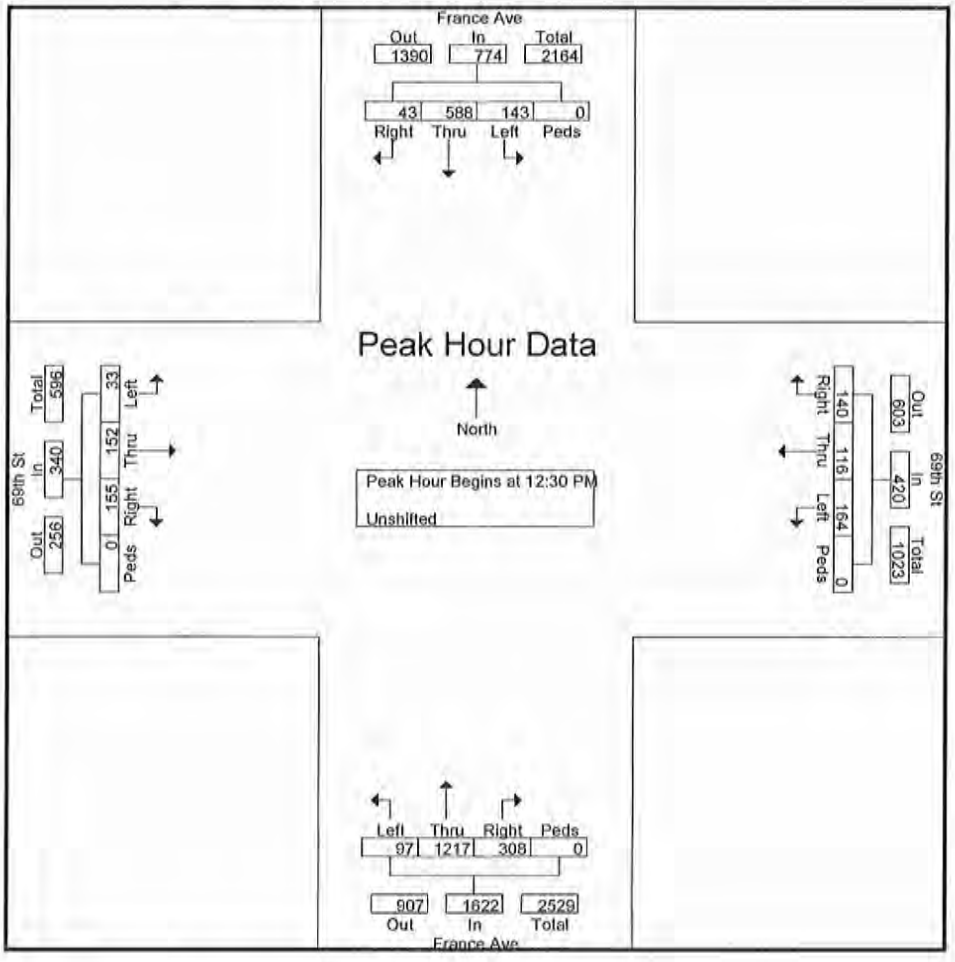

A123

WSB & Associates

701 Xenia Ave S
Minneapolis, MN

see map for site 6
2:30-6:30
Edina, MN
90's

File Name : Southdale Ent-site 6
Site Code : 00000006
Start Date : 7/10/2012
Page No : 1

Groups Printed- Class 1

	Southdale Ent From North					Southdale Ent From East					Southdale Ent From South					Southdale Ent From West					
Start Time	Right	Thru	Left	Peds	App. Total	Right	Thru	Left	Peds	App. Total	Right	Thru	Left	Peds	App. Total	Right	Thru	Left	Peds	App. Total	Int. Total
02:30 PM	0	0	0	0	0	4	13	0	0	17	0	0	7	0	7	4	0	0	0	4	28
02:45 PM	0	0	0	0	0	11	35	0	0	46	0	0	15	0	15	16	0	0	0	16	77
Total	0	0	0	0	0	15	48	0	0	63	0	0	22	0	22	20	0	0	0	20	105
03:00 PM	0	0	0	0	0	19	17	0	0	36	0	0	17	0	17	7	0	0	0	7	60
03:15 PM	0	0	0	0	0	11	27	0	0	38	0	0	36	0	36	16	0	0	0	16	90
03:30 PM	0	0	0	0	0	13	20	0	0	33	0	0	33	0	33	9	0	0	0	9	75
03:45 PM	0	0	0	0	0	16	25	0	0	41	0	0	36	0	36	7	0	0	0	7	84
Total	0	0	0	0	0	59	89	0	0	148	0	0	122	0	122	39	0	0	0	39	309
04:00 PM	0	0	0	0	0	12	26	0	0	38	0	0	38	0	38	6	0	0	0	6	82
04:15 PM	0	0	0	0	0	15	33	0	0	48	0	0	40	0	40	12	0	0	0	12	100
04:30 PM	0	0	0	0	0	8	31	0	0	39	0	0	52	0	52	9	0	0	0	9	100
04:45 PM	0	0	0	0	0	15	28	0	0	43	0	0	57	0	57	8	0	0	0	8	108
Total	0	0	0	0	0	50	118	0	0	168	0	0	187	0	187	35	0	0	0	35	390
05:00 PM	0	0	0	0	0	16	41	0	0	57	0	0	52	0	52	9	0	0	0	9	118
05:15 PM	0	0	0	0	0	16	32	0	0	48	0	0	61	0	61	13	0	0	0	13	122
05:30 PM	0	0	0	0	0	13	46	0	0	59	0	0	46	0	46	9	0	0	0	9	114
05:45 PM	0	0	0	0	0	20	37	0	0	57	0	0	48	0	48	10	0	0	0	10	115
Total	0	0	0	0	0	65	156	0	0	221	0	0	207	0	207	41	0	0	0	41	469
06:00 PM	0	0	0	0	0	20	23	0	0	43	0	0	59	0	59	15	0	0	0	15	117
06:15 PM	0	0	0	0	0	12	53	0	0	65	0	0	53	0	53	12	0	0	0	12	130
Grand Total	0	0	0	0	0	221	487	0	0	708	0	0	650	0	650	162	0	0	0	162	1520
Apprch %	0	0	0	0		31.2	68.8	0	0		0	0	100	0		100	0	0	0		
Total %	0	0	0	0	0	14.5	32	0	0	46.6	0	0	42.8	0	42.8	10.7	0	0	0	10.7	

WSB & Associates

701 Xenia Ave S
Minneapolis, MN

see map for site 6
2:30-6:30
Edina, MN
90's

File Name : Southdale Ent-site 6
Site Code : 00000006
Start Date : 7/10/2012
Page No : 2

	Southdale Ent From North					Southdale Ent From East					Southdale Ent From South					Southdale Ent From West					
Start Time	Right	Thru	Left	Peds	App. Total	Right	Thru	Left	Peds	App. Total	Right	Thru	Left	Peds	App. Total	Right	Thru	Left	Peds	App. Total	Int. Total
Peak Hour Analysis From 02:30 PM to 06:15 PM - Peak 1 of 1																					
Peak Hour for Entire Intersection Begins at 05:30 PM																					
05:30 PM	0	0	0	0	0	13	46	0	0	59	0	0	46	0	46	9	0	0	0	9	114
05:45 PM	0	0	0	0	0	**20**	37	0	0	57	0	0	48	0	48	10	0	0	0	10	115
06:00 PM	0	0	0	0	0	20	23	0	0	43	0	0	**59**	0	**59**	**15**	0	0	0	**15**	117
06:15 PM	0	0	0	0	0	12	**53**	0	0	**65**	0	0	53	0	53	12	0	0	0	12	**130**
Total Volume	0	0	0	0	0	65	159	0	0	224	0	0	206	0	206	46	0	0	0	46	476
% App. Total	0	0	0	0		29	71	0	0		0	0	100	0		100	0	0	0		
PHF	.000	.000	.000	.000	.000	.813	.750	.000	.000	.862	.000	.000	.873	.000	.873	.767	.000	.000	.000	.767	.915

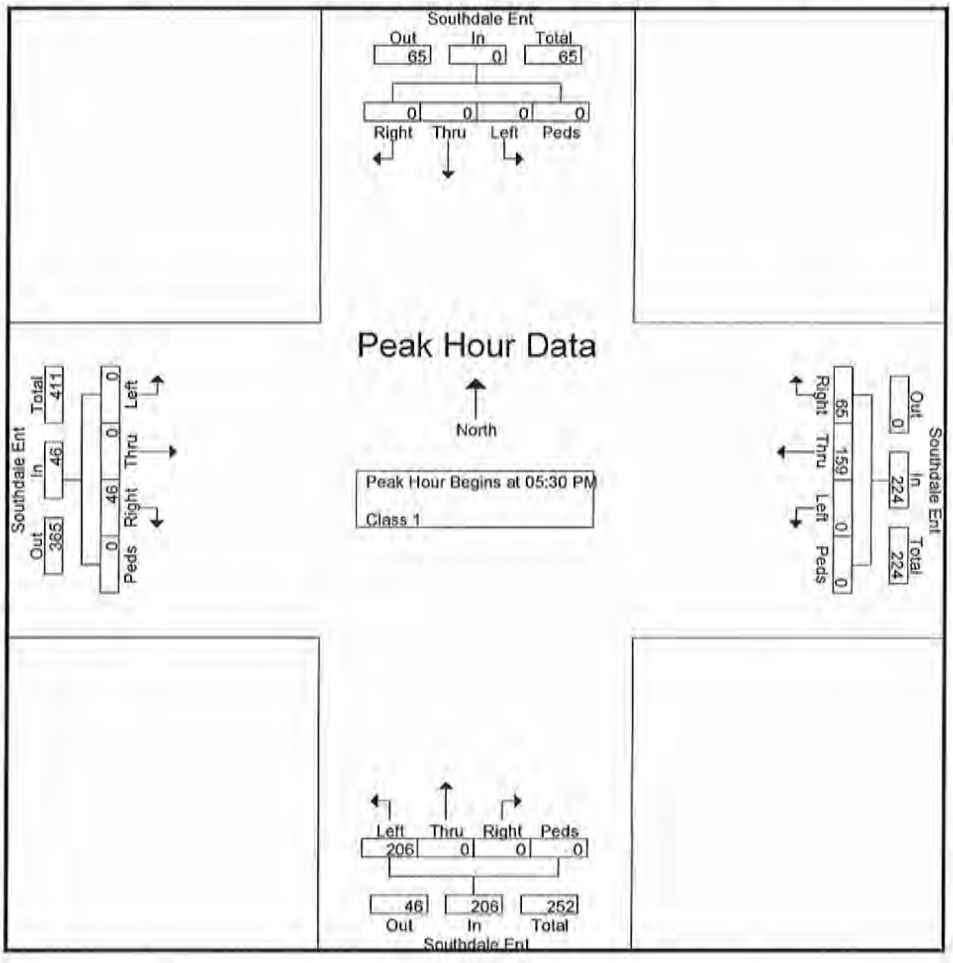

A125

WSB & Associates

701 Xenia Ave S
Minneapolis, MN

see map for site 6
10:30-2:30
Edina, MN
pt cloudy

File Name : Southdale Ent-site 6-sat
Site Code : 00000006
Start Date : 7/21/2012
Page No : 1

Groups Printed- Class 1

	Southdale Ent From North					Southdale Ent From East					Southdale Ent From South					Southdale Ent From West					
Start Time	Right	Thru	Left	Peds	App. Total	Right	Thru	Left	Peds	App. Total	Right	Thru	Left	Peds	App. Total	Right	Thru	Left	Peds	App. Total	Int. Total
10:30 AM	0	0	0	0	0	18	27	0	0	45	0	0	46	0	46	5	0	0	0	5	96
10:45 AM	0	0	0	0	0	16	23	0	0	39	0	0	71	0	71	3	0	0	0	3	113
Total	0	0	0	0	0	34	50	0	0	84	0	0	117	0	117	8	0	0	0	8	209
11:00 AM	0	0	0	0	0	15	21	0	0	36	0	0	56	0	56	1	0	0	0	1	93
11:15 AM	0	0	0	0	0	10	24	0	0	34	0	0	72	0	72	2	0	0	0	2	108
11:30 AM	0	0	0	0	0	14	24	0	0	38	0	0	61	0	61	1	0	0	0	1	100
11:45 AM	0	0	0	0	0	16	20	0	0	36	0	0	76	0	76	9	0	0	0	9	121
Total	0	0	0	0	0	55	89	0	0	144	0	0	265	0	265	13	0	0	0	13	422
12:00 PM	0	0	0	0	0	15	31	0	0	46	0	0	73	0	73	6	0	0	0	6	125
12:15 PM	0	0	0	0	0	13	47	0	0	60	0	0	74	0	74	13	0	0	0	13	147
12:30 PM	0	0	0	0	0	14	29	0	0	43	0	0	72	0	72	14	0	0	0	14	129
12:45 PM	0	0	0	0	0	12	26	0	0	38	0	0	83	0	83	17	0	0	0	17	138
Total	0	0	0	0	0	54	133	0	0	187	0	0	302	0	302	50	0	0	0	50	539
01:00 PM	0	0	0	0	0	15	29	0	0	44	0	0	99	0	99	10	0	0	0	10	153
01:15 PM	0	0	0	0	0	11	31	0	0	42	0	0	75	0	75	6	0	0	0	6	123
01:30 PM	0	0	0	0	0	12	26	0	0	38	0	0	84	0	84	3	0	0	0	3	125
01:45 PM	0	0	0	0	0	8	36	0	0	44	0	0	77	0	77	14	0	0	0	14	135
Total	0	0	0	0	0	46	122	0	0	168	0	0	335	0	335	33	0	0	0	33	536
02:00 PM	0	0	0	0	0	9	23	0	0	32	0	0	87	0	87	16	0	0	0	16	135
02:15 PM	0	0	0	0	0	9	28	0	0	37	0	0	70	0	70	20	0	0	0	20	127
Grand Total	0	0	0	0	0	207	445	0	0	652	0	0	1176	0	1176	140	0	0	0	140	1968
Apprch %	0	0	0	0		31.7	68.3	0	0		0	0	100	0		100	0	0	0		
Total %	0	0	0	0	0	10.5	22.6	0	0	33.1	0	0	59.8	0	59.8	7.1	0	0	0	7.1	

A126

WSB & Associates

701 Xenia Ave S
Minneapolis, MN

see map for site 6
10:30-2:30
Edina, MN
pt cloudy

File Name : Southdale Ent-site 6-sat
Site Code : 00000006
Start Date : 7/21/2012
Page No : 2

	Southdale Ent From North					Southdale Ent From East					Southdale Ent From South					Southdale Ent From West					
Start Time	Right	Thru	Left	Peds	App. Total	Right	Thru	Left	Peds	App. Total	Right	Thru	Left	Peds	App. Total	Right	Thru	Left	Peds	App. Total	Int. Total
Peak Hour Analysis From 10:30 AM to 02:15 PM - Peak 1 of 1																					
Peak Hour for Entire Intersection Begins at 12:15 PM																					
12:15 PM	0	0	0	0	0	13	**47**	0	0	**60**	0	0	74	0	74	13	0	0	0	13	147
12:30 PM	0	0	0	0	0	14	29	0	0	43	0	0	72	0	72	14	0	0	0	14	129
12:45 PM	0	0	0	0	0	12	26	0	0	38	0	0	83	0	83	17	0	0	0	17	138
01:00 PM	0	0	0	0	0	**15**	29	0	0	44	0	0	**99**	0	**99**	10	0	0	0	10	**153**
Total Volume	0	0	0	0	0	54	131	0	0	185	0	0	328	0	328	54	0	0	0	54	567
% App. Total	0	0	0	0		29.2	70.8	0	0		0	0	100	0		100	0	0	0		
PHF	.000	.000	.000	.000	.000	.900	.697	.000	.000	.771	.000	.000	.828	.000	.828	.794	.000	.000	.000	.794	.926

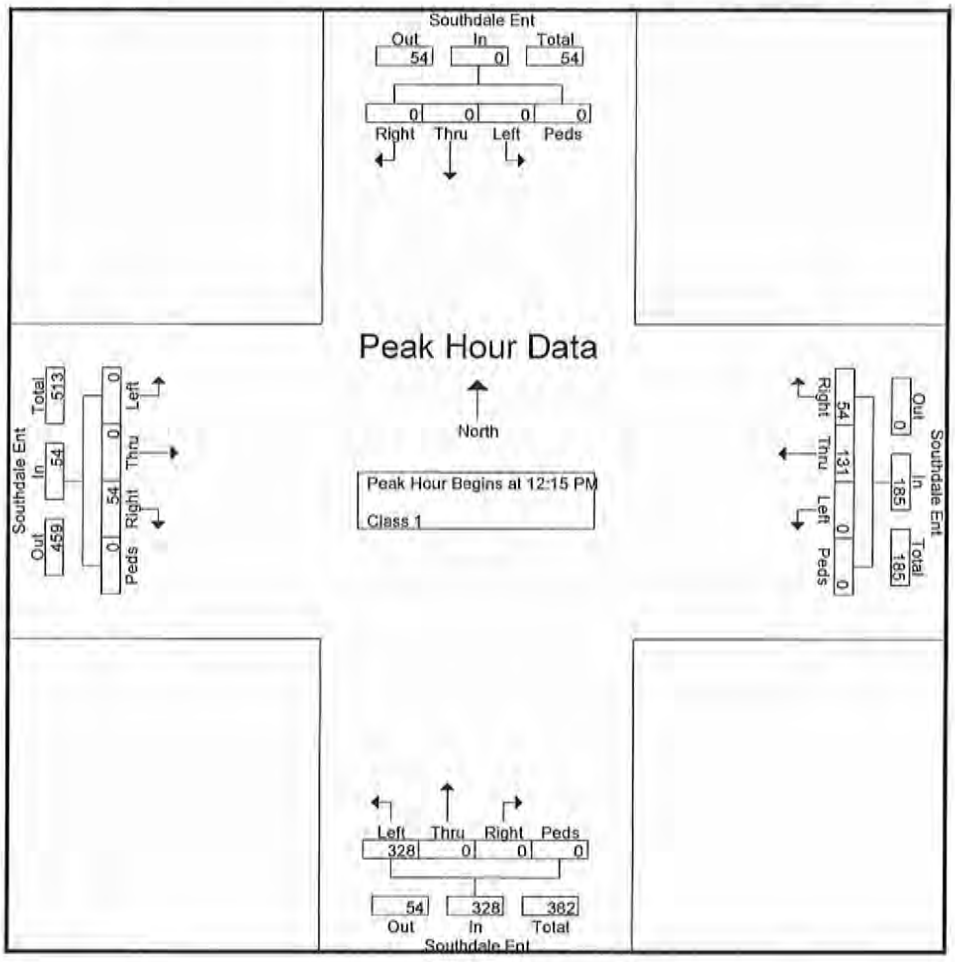

A127

WSB & Associates

701 Xenia Ave S
Minneapolis, MN

see map for site 7
2:30-6:30 pm
Edina, MN
90's

File Name : Southdale Ent-site 7
Site Code : 00000007
Start Date : 7/10/2012
Page No : 1

Groups Printed- Unshifted

	Southdale From North					southdale From East					Southdale From South					southdale From West					
Start Time	Right	Thru	Left	Peds	App. Total	Right	Thru	Left	Peds	App. Total	Right	Thru	Left	Peds	App. Total	Right	Thru	Left	Peds	App. Total	Int. Total
02:30 PM	0	0	0	0	0	0	22	1	0	23	0	3	1	1	5	0	0	0	0	0	28
02:45 PM	0	0	0	0	0	0	29	0	0	29	0	5	1	0	6	0	0	0	0	0	35
Total	0	0	0	0	0	0	51	1	0	52	0	8	2	1	11	0	0	0	0	0	63
03:00 PM	0	0	0	0	0	0	25	0	0	25	0	9	3	0	12	0	0	0	0	0	37
03:15 PM	0	0	0	0	0	2	25	0	0	27	0	0	1	0	1	0	0	0	0	0	28
03:30 PM	0	0	0	0	0	1	18	0	0	19	0	3	5	0	8	0	0	0	0	0	27
03:45 PM	0	0	0	0	0	0	23	0	0	23	0	1	0	0	1	0	0	0	0	0	24
Total	0	0	0	0	0	3	91	0	0	94	0	13	9	0	22	0	0	0	0	0	116
04:00 PM	0	0	0	0	0	1	18	0	0	19	0	3	6	0	9	0	0	0	0	0	28
04:15 PM	0	0	0	0	0	0	31	0	0	31	0	2	2	0	4	0	0	0	0	0	35
04:30 PM	0	0	0	0	0	0	25	0	0	25	0	6	5	0	11	0	0	0	0	0	36
04:45 PM	0	0	0	0	0	0	28	0	0	28	0	4	6	0	10	0	0	0	0	0	38
Total	0	0	0	0	0	1	102	0	0	103	0	15	19	0	34	0	0	0	0	0	137
05:00 PM	0	0	0	0	0	2	24	1	0	27	0	3	7	0	10	0	0	0	0	0	37
05:15 PM	0	0	0	0	0	1	28	0	0	29	0	7	5	0	12	0	0	0	0	0	41
05:30 PM	0	0	0	0	0	1	27	0	0	28	0	6	11	0	17	0	0	0	0	0	45
05:45 PM	0	0	0	0	0	0	36	0	0	36	0	6	5	0	11	0	0	0	0	0	47
Total	0	0	0	0	0	4	115	1	0	120	0	22	28	0	50	0	0	0	0	0	170
06:00 PM	0	0	0	0	0	2	15	0	0	17	0	5	3	0	8	0	0	0	0	0	25
06:15 PM	0	0	0	0	0	1	35	0	0	36	0	5	12	0	17	0	0	0	0	0	53
Grand Total	0	0	0	0	0	11	409	2	0	422	0	68	73	1	142	0	0	0	0	0	564
Apprch %	0	0	0	0		2.6	96.9	0.5	0		0	47.9	51.4	0.7		0	0	0	0		
Total %	0	0	0	0	0	2	72.5	0.4	0	74.8	0	12.1	12.9	0.2	25.2	0	0	0	0	0	

WSB & Associates

701 Xenia Ave S
Minneapolis, MN

see map for site 7
2:30-6:30 pm
Edina, MN
90's

File Name : Southdale Ent-site 7
Site Code : 00000007
Start Date : 7/10/2012
Page No : 2

	Southdale From North					southdale From East					Southdale From South					southdale From West					
Start Time	Right	Thru	Left	Peds	App. Total	Right	Thru	Left	Peds	App. Total	Right	Thru	Left	Peds	App. Total	Right	Thru	Left	Peds	App. Total	Int. Total
Peak Hour Analysis From 02:30 PM to 06:15 PM - Peak 1 of 1																					
Peak Hour for Entire Intersection Begins at 05:00 PM																					
05:00 PM	0	0	0	0	0	2	24	1	0	27	0	3	7	0	10	0	0	0	0	0	37
05:15 PM	0	0	0	0	0	1	28	0	0	29	0	7	5	0	12	0	0	0	0	0	41
05:30 PM	0	0	0	0	0	1	27	0	0	28	0	6	11	0	17	0	0	0	0	0	45
05:45 PM	0	0	0	0	0	0	36	0	0	36	0	6	5	0	11	0	0	0	0	0	47
Total Volume	0	0	0	0	0	4	115	1	0	120	0	22	28	0	50	0	0	0	0	0	170
% App. Total	0	0	0	0		3.3	95.8	0.8	0		0	44	56	0		0	0	0	0		
PHF	.000	.000	.000	.000	.000	.500	.799	.250	.000	.833	.000	.786	.636	.000	.735	.000	.000	.000	.000	.000	.904

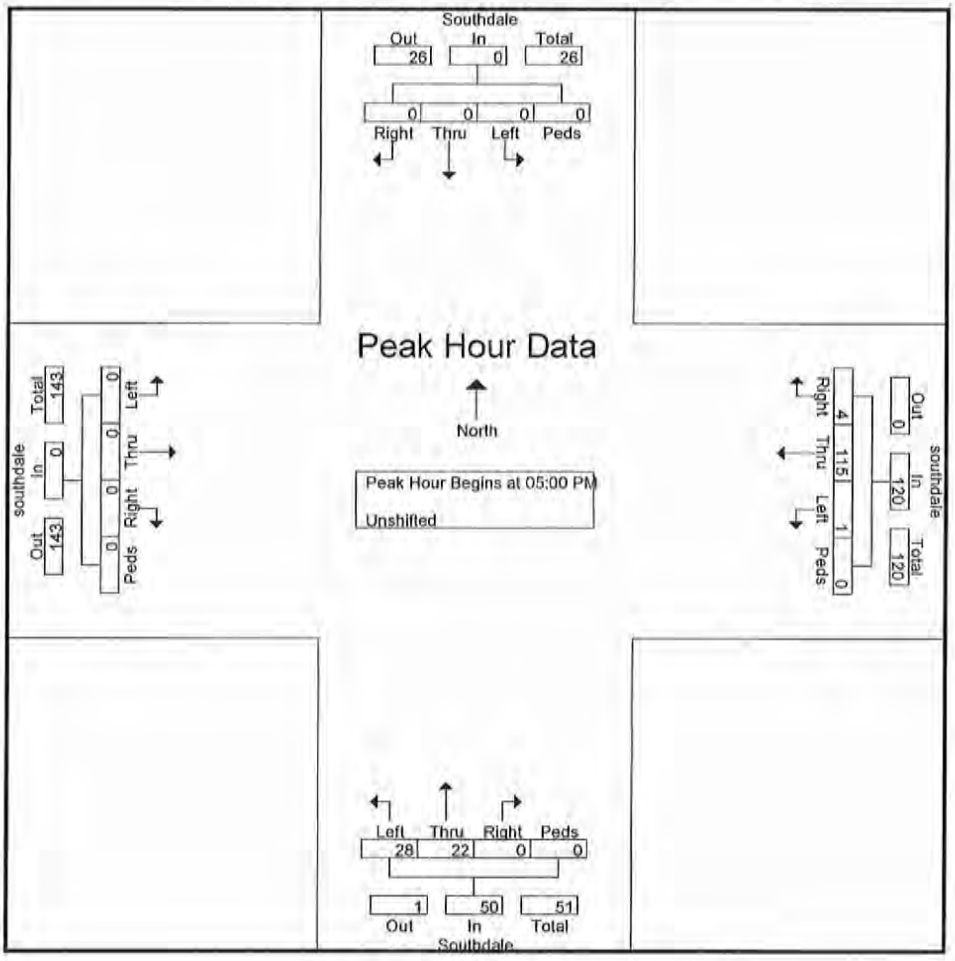

A129

WSB & Associates

701 Xenia Ave S
Minneapolis, MN

see map for site 7
2:30-6:30 pm
Edina, MN
90's

File Name : Southdale Ent-site 7-sat
Site Code : 00000007
Start Date : 7/10/2012
Page No : 1

Groups Printed- Unshifted

	Southdale From North					southdale From East					Southdale From South					southdale From West					
Start Time	Right	Thru	Left	Peds	App. Total	Right	Thru	Left	Peds	App. Total	Right	Thru	Left	Peds	App. Total	Right	Thru	Left	Peds	App. Total	Int. Total
02:30 PM	0	0	0	0	0	0	38	1	0	39	0	5	5	1	11	0	0	0	0	0	50
02:45 PM	0	0	0	0	0	0	33	0	0	33	0	8	4	0	12	0	0	0	0	0	45
Total	0	0	0	0	0	0	71	1	0	72	0	13	9	1	23	0	0	0	0	0	95
03:00 PM	0	0	0	0	0	0	29	0	0	29	0	9	6	0	15	0	0	0	0	0	44
03:15 PM	0	0	0	0	0	2	29	0	0	31	0	4	3	0	7	0	0	0	0	0	38
03:30 PM	0	0	0	0	0	1	32	1	0	34	0	8	5	0	13	0	0	0	0	0	47
03:45 PM	0	0	0	0	0	0	29	2	0	31	0	7	4	0	11	0	0	0	0	0	42
Total	0	0	0	0	0	3	119	3	0	125	0	28	18	0	46	0	0	0	0	0	171
04:00 PM	0	0	0	0	0	1	23	1	0	25	0	2	8	0	10	0	0	0	0	0	35
04:15 PM	0	0	0	0	0	0	39	0	0	39	0	5	7	0	12	0	0	0	0	0	51
04:30 PM	0	0	0	0	0	0	29	1	0	30	0	4	2	0	6	0	0	0	0	0	36
04:45 PM	0	0	0	0	0	0	32	0	0	32	0	2	5	0	7	0	0	0	0	0	39
Total	0	0	0	0	0	1	123	2	0	126	0	13	22	0	35	0	0	0	0	0	161
05:00 PM	0	0	0	0	0	2	39	1	0	42	0	5	3	0	8	0	0	0	0	0	50
05:15 PM	0	0	0	0	0	1	36	0	0	37	0	8	5	0	13	0	0	0	0	0	50
05:30 PM	0	0	0	0	0	1	33	1	0	35	0	6	4	0	10	0	0	0	0	0	45
05:45 PM	0	0	0	0	0	0	41	0	0	41	0	9	2	0	11	0	0	0	0	0	52
Total	0	0	0	0	0	4	149	2	0	155	0	28	14	0	42	0	0	0	0	0	197
06:00 PM	0	0	0	0	0	2	26	0	0	28	0	12	4	0	16	0	0	0	0	0	44
06:15 PM	0	0	0	0	0	1	31	0	0	32	0	4	5	0	9	0	0	0	0	0	41
Grand Total	0	0	0	0	0	11	519	8	0	538	0	98	72	1	171	0	0	0	0	0	709
Apprch %	0	0	0	0		2	96.5	1.5	0		0	57.3	42.1	0.6		0	0	0	0		
Total %	0	0	0	0	0	1.6	73.2	1.1	0	75.9	0	13.8	10.2	0.1	24.1	0	0	0	0	0	

A130

WSB & Associates

701 Xenia Ave S
Minneapolis, MN

see map for site 7
2:30-6:30 pm
Edina, MN
90's

File Name : Southdale Ent-site 7-sat
Site Code : 00000007
Start Date : 7/10/2012
Page No : 2

	Southdale From North					southdale From East					Southdale From South					southdale From West					
Start Time	Right	Thru	Left	Peds	App. Total	Right	Thru	Left	Peds	App. Total	Right	Thru	Left	Peds	App. Total	Right	Thru	Left	Peds	App. Total	Int. Total
Peak Hour Analysis From 02:30 PM to 06:15 PM - Peak 1 of 1																					
Peak Hour for Entire Intersection Begins at 05:00 PM																					
05:00 PM	0	0	0	0	0	2	39	1	0	42	0	5	3	0	8	0	0	0	0	0	50
05:15 PM	0	0	0	0	0	1	36	0	0	37	0	8	5	0	13	0	0	0	0	0	50
05:30 PM	0	0	0	0	0	1	33	1	0	35	0	6	4	0	10	0	0	0	0	0	45
05:45 PM	0	0	0	0	0	0	41	0	0	41	0	9	2	0	11	0	0	0	0	0	52
Total Volume	0	0	0	0	0	4	149	2	0	155	0	28	14	0	42	0	0	0	0	0	197
% App. Total	0	0	0	0		2.6	96.1	1.3	0		0	66.7	33.3	0		0	0	0	0		
PHF	.000	.000	.000	.000	.000	.500	.909	.500	.000	.923	.000	.778	.700	.000	.808	.000	.000	.000	.000	.000	.947

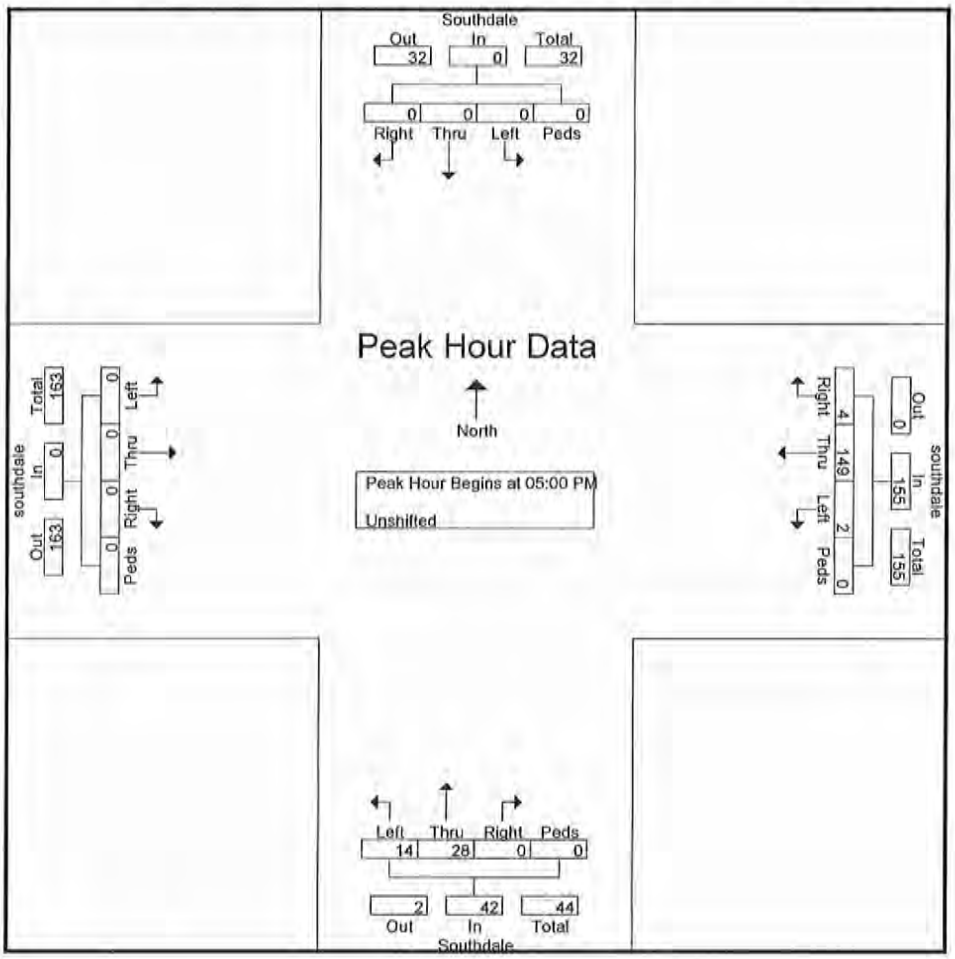

A131

WSB & Associates

701 Xenia Ave S
Minneapolis, MN

see map for site 10
2:30-6:30
Edina, MN
90's

File Name : Southdale Ent-site 10
Site Code : 00000010
Start Date : 7/11/2012
Page No : 1

Groups Printed- Unshifted

	Southdale Ent From North					Southdale Ent From East					Southdale Ent From South					Southdale Ent From West					
Start Time	Right	Thru	Left	Peds	App. Total	Right	Thru	Left	Peds	App. Total	Right	Thru	Left	Peds	App. Total	Right	Thru	Left	Peds	App. Total	Int. Total
Factor	1.0	1.0	1.0	1.0		1.0	1.0	1.0	1.0		1.0	1.0	1.0	1.0		1.0	1.0	1.0	1.0		
02:30 PM	0	16	42	0	58	0	0	0	0	0	0	0	0	0	0	0	0	0	0	0	58
02:45 PM	0	17	61	0	78	0	0	0	0	0	0	0	0	0	0	0	0	0	0	0	78
Total	0	33	103	0	136	0	0	0	0	0	0	0	0	0	0	0	0	0	0	0	136
03:00 PM	0	17	51	0	68	0	0	0	0	0	0	0	0	0	0	0	0	0	0	0	68
03:15 PM	0	15	59	0	74	0	0	0	0	0	0	0	0	0	0	0	0	0	0	0	74
03:30 PM	0	20	58	0	78	0	0	0	0	0	0	0	0	0	0	0	0	0	0	0	78
03:45 PM	0	35	46	0	81	0	0	0	0	0	0	0	0	0	0	0	0	0	0	0	81
Total	0	87	214	0	301	0	0	0	0	0	0	0	0	0	0	0	0	0	0	0	301
04:00 PM	0	7	76	0	83	0	0	0	0	0	0	0	0	0	0	0	0	0	0	0	83
04:15 PM	0	24	49	2	75	0	0	0	0	0	0	0	0	0	0	0	0	0	0	0	75
04:30 PM	0	19	44	2	65	0	0	0	0	0	0	0	0	0	0	0	0	0	0	0	65
04:45 PM	0	31	50	0	81	0	0	0	0	0	0	0	0	0	0	0	0	0	0	0	81
Total	0	81	219	4	304	0	0	0	0	0	0	0	0	0	0	0	0	0	0	0	304
05:00 PM	0	34	49	0	83	0	0	0	0	0	0	0	0	0	0	0	0	0	0	0	83
05:15 PM	0	29	68	0	97	0	0	0	0	0	0	0	0	0	0	0	0	0	0	0	97
05:30 PM	0	18	65	0	83	0	0	0	0	0	0	0	0	0	0	0	0	0	0	0	83
05:45 PM	0	23	36	0	59	0	0	0	0	0	0	0	0	0	0	0	0	0	0	0	59
Total	0	104	218	0	322	0	0	0	0	0	0	0	0	0	0	0	0	0	0	0	322
06:00 PM	0	26	60	0	86	0	0	0	0	0	0	0	0	0	0	0	0	0	0	0	86
06:15 PM	0	21	35	0	56	0	0	0	0	0	0	0	0	0	0	0	0	0	0	0	56
Grand Total	0	352	849	4	1205	0	0	0	0	0	0	0	0	0	0	0	0	0	0	0	1205
Apprch %	0	29.2	70.5	0.3		0	0	0	0		0	0	0	0		0	0	0	0		
Total %	0	29.2	70.5	0.3	100	0	0	0	0	0	0	0	0	0	0	0	0	0	0	0	

WSB & Associates

701 Xenia Ave S
Minneapolis, MN

see map for site 10
2:30-6:30
Edina, MN
90's

File Name : Southdale Ent-site 10
Site Code : 00000010
Start Date : 7/11/2012
Page No : 2

	Southdale Ent From North					Southdale Ent From East					Southdale Ent From South					Southdale Ent From West					
Start Time	Right	Thru	Left	Peds	App. Total	Right	Thru	Left	Peds	App. Total	Right	Thru	Left	Peds	App. Total	Right	Thru	Left	Peds	App. Total	Int. Total
Peak Hour Analysis From 02:30 PM to 06:15 PM - Peak 1 of 1																					
Peak Hour for Entire Intersection Begins at 04:45 PM																					
04:45 PM	0	31	50	0	81	0	0	0	0	0	0	0	0	0	0	0	0	0	0	0	81
05:00 PM	0	34	49	0	83	0	0	0	0	0	0	0	0	0	0	0	0	0	0	0	83
05:15 PM	0	29	68	0	97	0	0	0	0	0	0	0	0	0	0	0	0	0	0	0	97
05:30 PM	0	18	65	0	83	0	0	0	0	0	0	0	0	0	0	0	0	0	0	0	83
Total Volume	0	112	232	0	344	0	0	0	0	0	0	0	0	0	0	0	0	0	0	0	344
% App. Total	0	32.6	67.4	0		0	0	0	0		0	0	0	0		0	0	0	0		
PHF	.000	.824	.853	.000	.887	.000	.000	.000	.000	.000	.000	.000	.000	.000	.000	.000	.000	.000	.000	.000	.887

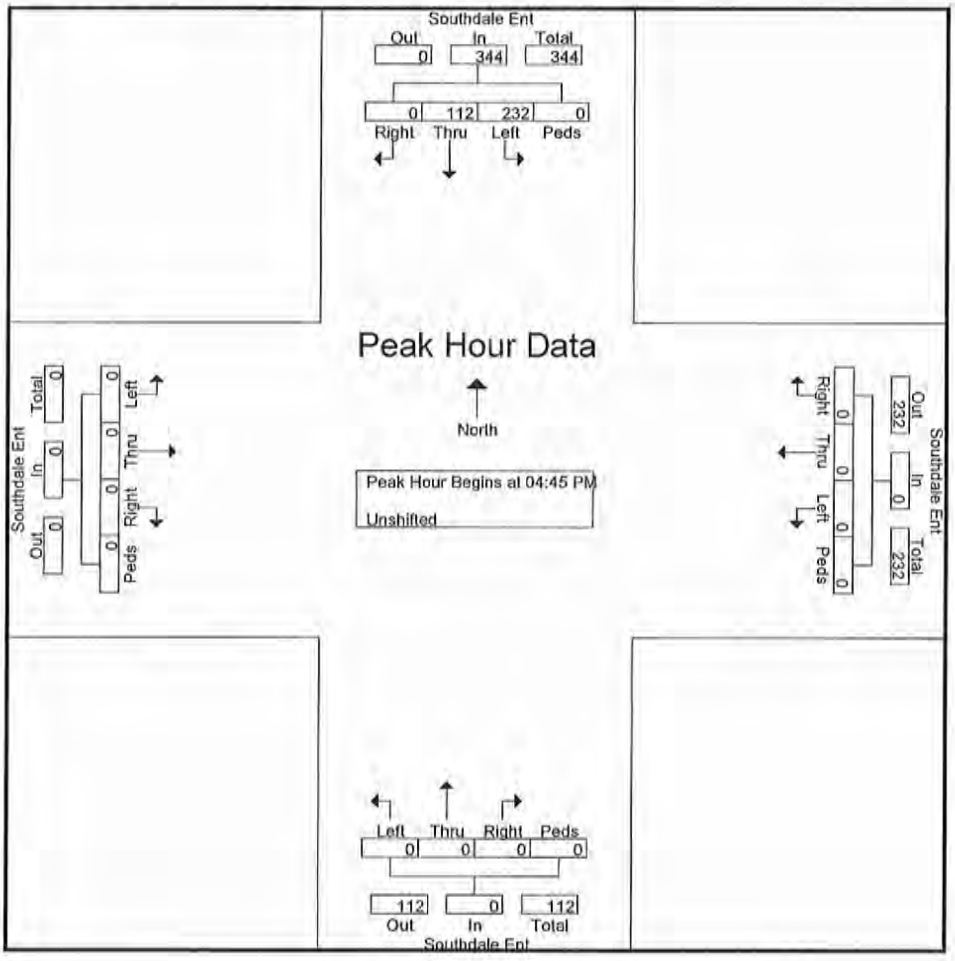

WSB & Associates

701 Xenia Ave S
Minneapolis, MN

see map for site 10
10:30-2:30
Edina, MN
pt cloudy

File Name : Southdale Ent-site 10-sat
Site Code : 00000010
Start Date : 7/21/2012
Page No : 1

Groups Printed- Unshifted

	Southdale Ent From North					Southdale Ent From East					Southdale Ent From South					Southdale Ent From West					
Start Time	Right	Thru	Left	Peds	App. Total	Right	Thru	Left	Peds	App. Total	Right	Thru	Left	Peds	App. Total	Right	Thru	Left	Peds	App. Total	Int. Total
10:30 AM	0	38	23	0	61	0	0	0	0	0	0	0	0	0	0	0	0	0	0	0	61
10:45 AM	0	39	51	0	90	0	0	0	0	0	0	0	0	0	0	0	0	0	0	0	90
Total	0	77	74	0	151	0	0	0	0	0	0	0	0	0	0	0	0	0	0	0	151
11:00 AM	0	6	18	0	24	0	0	0	0	0	0	0	0	0	0	0	0	0	0	0	24
11:15 AM	0	23	39	0	62	0	0	0	0	0	0	0	0	0	0	0	0	0	0	0	62
11:30 AM	0	32	44	0	76	0	0	0	0	0	0	0	0	0	0	0	0	0	0	0	76
11:45 AM	0	38	59	0	97	0	0	0	0	0	0	0	0	0	0	0	0	0	0	0	97
Total	0	99	160	0	259	0	0	0	0	0	0	0	0	0	0	0	0	0	0	0	259
12:00 PM	0	39	60	0	99	0	0	0	0	0	0	0	0	0	0	0	0	0	0	0	99
12:15 PM	0	33	51	0	84	0	0	0	0	0	0	0	0	0	0	0	0	0	0	0	84
12:30 PM	0	28	45	0	73	0	0	0	0	0	0	0	0	0	0	0	0	0	0	0	73
12:45 PM	0	32	46	0	78	0	0	0	0	0	0	0	0	0	0	0	0	0	0	0	78
Total	0	132	202	0	334	0	0	0	0	0	0	0	0	0	0	0	0	0	0	0	334
01:00 PM	0	23	60	0	83	0	0	0	0	0	0	0	0	0	0	0	0	0	0	0	83
01:15 PM	0	22	55	0	77	0	0	0	0	0	0	0	0	0	0	0	0	0	0	0	77
01:30 PM	0	27	60	0	87	0	0	0	0	0	0	0	0	0	0	0	0	0	0	0	87
01:45 PM	0	26	62	0	88	0	0	0	0	0	0	0	0	0	0	0	0	0	0	0	88
Total	0	98	237	0	335	0	0	0	0	0	0	0	0	0	0	0	0	0	0	0	335
02:00 PM	0	38	61	0	99	0	0	0	0	0	0	0	0	0	0	0	0	0	0	0	99
02:15 PM	0	16	48	0	64	0	0	0	0	0	0	0	0	0	0	0	0	0	0	0	64
Grand Total	0	460	782	0	1242	0	0	0	0	0	0	0	0	0	0	0	0	0	0	0	1242
Apprch %	0	37	63	0		0	0	0	0		0	0	0	0		0	0	0	0		
Total %	0	37	63	0	100	0	0	0	0	0	0	0	0	0	0	0	0	0	0	0	

A134

WSB & Associates

701 Xenia Ave S
Minneapolis, MN

see map for site 10
10:30-2:30
Edina, MN
pt cloudy

File Name : Southdale Ent-site 10-sat
Site Code : 00000010
Start Date : 7/21/2012
Page No : 2

	Southdale Ent From North					Southdale Ent From East					Southdale Ent From South					Southdale Ent From West					
Start Time	Right	Thru	Left	Peds	App. Total	Right	Thru	Left	Peds	App. Total	Right	Thru	Left	Peds	App. Total	Right	Thru	Left	Peds	App. Total	Int. Total
Peak Hour Analysis From 10:30 AM to 02:15 PM - Peak 1 of 1																					
Peak Hour for Entire Intersection Begins at 11:30 AM																					
11:30 AM	0	32	44	0	76	0	0	0	0	0	0	0	0	0	0	0	0	0	0	0	76
11:45 AM	0	38	59	0	97	0	0	0	0	0	0	0	0	0	0	0	0	0	0	0	97
12:00 PM	0	**39**	**60**	0	**99**	0	0	0	0	0	0	0	0	0	0	0	0	0	0	0	**99**
12:15 PM	0	33	51	0	84	0	0	0	0	0	0	0	0	0	0	0	0	0	0	0	84
Total Volume	0	142	214	0	356	0	0	0	0	0	0	0	0	0	0	0	0	0	0	0	356
% App. Total	0	39.9	60.1	0		0	0	0	0		0	0	0	0		0	0	0	0		
PHF	.000	.910	.892	.000	.899	.000	.000	.000	.000	.000	.000	.000	.000	.000	.000	.000	.000	.000	.000	.000	.899

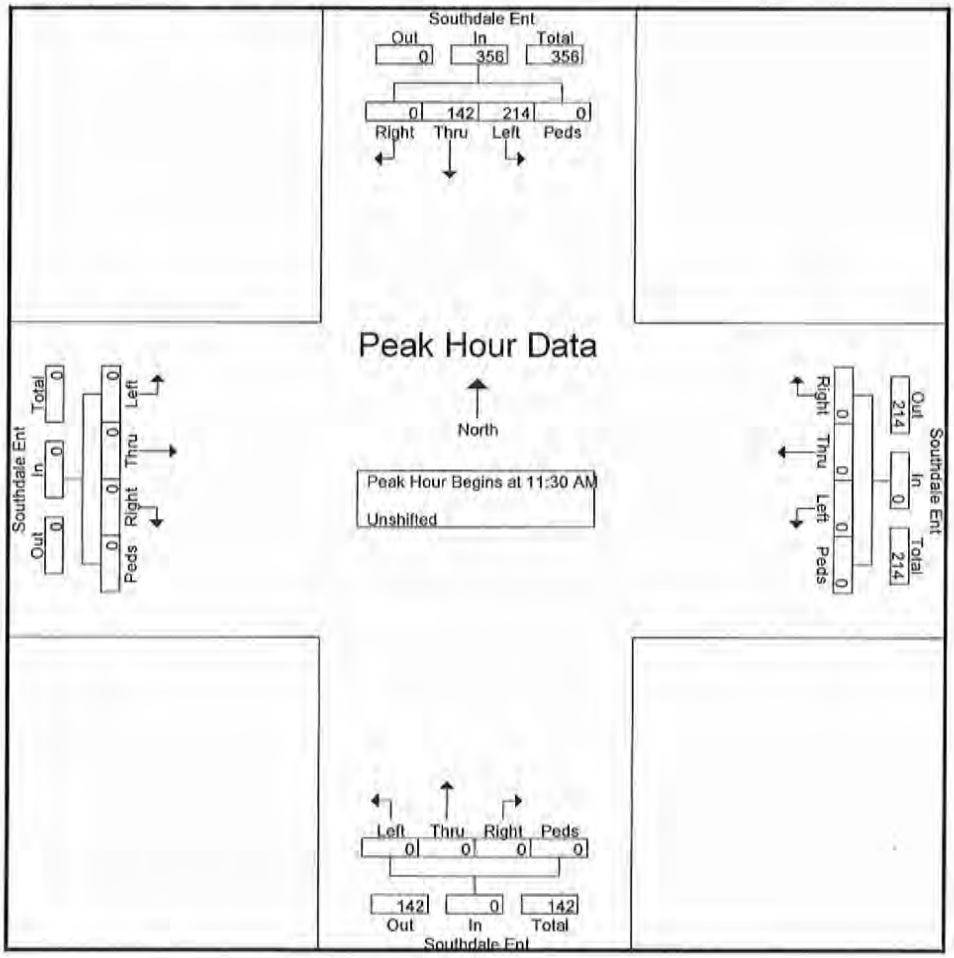

A135

SimTraffic Simulation Summary
7/30/2012
Existing 2012 PM - Weekday
Measures of Effectiveness

Control	Intersection Location	Appr	Forecast Volumes L	T	R	Total	Modeled Volumes L	T	R	Total	Error Volumes L	T	R	Volume Error by Approach Total	%	Appr	Total Delay by Movement (Sec/Veh) L	T	R	Level of Service by Movement L	T	R	LOS by Approach (Sec/Veh) Delay	LOS	LOS by Intersection (Sec/Veh) Delay	LOS	Appr	Average & Maximum Traffic Queueing (feet) Left-Turn Ave Queue	Left-Turn Max Queue	Left-Turn Storage	Through Ave Queue	Through Max Queue	Right-Turn Ave Queue	Right-Turn Max Queue	Right-Turn Storage
Signalized	1: 69th Street & France Avenue	NB	175	1169	200	1564	166	1157	209	1534	-7	-32	9	-30	-2%	NB	46	20	4	D	C	A	21	C	30	C	NB	111	227	250	132	246	18	214	220
		WB	148	184	88	409	147	155	82	384	-1	-9	-6	-16	-4%	WB	53	72	3	D	E	A	50	D			WB	107	208	250	73	175	12	148	100
		SB	109	748	30	887	121	734	32	887	12	-14	2	0	0%	SB	59	27	6	F	C	A	31	C			SB	105	213	200	119	258	15	147	100
		EB	35	205	185	425	36	206	187	429	1	1	2	4	1%	EB	52	69	10	D	E	B	42	D			EB	32	124	150	102	196			
Unsignalized	2: 69th Street & Southdale SW	NB	21	1	46	68	21	1	43	65	0	0	-3	-3	-4%	NB	16	50	9	C	E	A	12	B	5	A	NB				18	61	26	65	50
		WB	44	213	55	312	45	205	59	309	1	-8	4	-3	-1%	WB	6	1	1	A	A	A	2	A			WB	11	39	150					
		SB	94	11	165	270	88	11	157	256	-6	0	-8	-14	-5%	SB	18	19	8	C	C	A	12	B			SB				50	121	46	92	150
		EB	0	490	24	514	0	511	27	538	0	21	3	24	5%	EB	0	3	3	A	A	A	3	A			EB					7			
Unsignalized	3: 69th Street & Southdale SE	NB	0	0	87	87	0	0	78	78	0	0	-9	-9	-10%	NB	0	0	4	A	A	A	4	A	2	A	NB						34	67	
		WB	74	261	55	390	68	292	52	372	-6	-9	-3	-18	-5%	WB	5	1	0	A	A	A	2	A			WB	2	22	100					
		SB	0	0	52	52	0	0	57	57	0	0	5	5	10%	SB	0	0	3	A	A	A	3	A			SB						30	58	
		EB	185	366	57	630	180	406	55	641	-5	18	-2	11	2%	EB	5	1	1	A	A	A	2	A			EB	6	69	155	1	21			
Unsignalized	4: 69th Street & Park & Ride Slip Ramp	NB	0	0	0	0	0	0	0	0	0	0	0	0	0%	NB	0	0	0	A	A	A	0	A	3	A	NB								
		WB	0	390	43	433	0	372	46	418	0	-18	3	-15	-3%	WB	0	2	1	A	A	A	2	A			WB								
		SB	0	0	0	0	0	0	0	0	0	0	0	0	0%	SB	0	0	0	A	A	A	0	A			SB								
		EB	0	475	0	475	0	485	0	485	0	10	0	10	2%	EB	0	3	0	A	A	A	3	A			EB				15	123			
Signalized	5: 69th Street & York Avenue	NB	170	960	37	1167	157	902	33	1152	-13	2	-4	-15	-1%	NB	79	15	10	E	B	B	24	C	32	C	NB	100	160	100	213	448			
		WB	42	92	38	172	43	92	42	177	1	0	4	5	3%	WB	63	144	92	E	E	E	112	E			WB	42	131	100	95	189			
		SB	49	728	170	947	47	712	173	932	-2	-16	3	-15	-2%	SB	81	10	5	E	B	A	13	B			SB	48	134	120	76	223	13	130	100
		EB	176	151	148	475	173	154	157	484	-3	3	9	9	2%	EB	67	90	30	E	E	C	62	E			EB	144	199	150	138	246			
Unsignalized	6: Mall Circulation Rd & Southdale SE	NB	240	0	0	240	232	0	0	232	-8	0	0	-8	-3%	NB	1	0	0	A	A	A	1	A	3	A	NB				3	30			
		WB	0	132	55	187	0	123	58	181	0	-9	3	-6	-3%	WB	0	7	3	A	A	A	6	A			WB				27	49			
		SB	0	0	0	0	0	0	0	0	0	0	0	0	0%	SB	0	0	0	A	A	A	0	A			SB								
		EB	0	0	52	52	0	0	57	57	0	0	5	5	10%	EB	0	0	0	A	A	A	0	A			EB								
Unsignalized	7: Mall Circulation Rd & Park & Ride	NB	53	20	0	73	51	17	0	68	-2	-3	0	-5	-7%	NB	3	3	0	A	A	A	3	A	1	A	NB				31	65			
		WB	0	134	3	137	0	130	2	132	0	-4	-1	-5	-4%	WB	0	0	0	A	A	A	0	A			WB								
		SB	0	0	0	0	0	0	0	0	0	0	0	0	0%	SB	0	0	0	A	A	A	0	A			SB								
		EB	0	0	0	0	0	0	0	0	0	0	0	0	0%	EB	0	0	0	A	A	A	0	A			EB								
Signalized	8: Southdale East Exit & York Avenue	NB	0	1121	53	1174	0	1125	51	1176	0	4	-2	2	0%	NB	0	19	11	A	B	B	19	B	22	C	NB				176	315			
		WB	135	0	146	281	122	0	143	265	-13	0	-3	-16	-6%	WB	65	0	6	E	A	A	33	C			WB	50	137	50			20	144	100
		SB	150	735	0	885	152	729	0	881	2	-6	0	-4	0%	SB	60	11	0	E	B	A	19	B			SB	126	240	200	124	261			
		EB	116	17	78	211	126	21	75	221	7	4	-1	10	5%	EB	57	57	1	E	E	A	38	D			EB	57	127		21	87			
Unsignalized	9: Southdale East Entrance & York Avenue	NB	65	1266	2	1333	59	1277	3	1339	-6	11	1	6	0%	NB	6	3	2	A	A	A	3	A	4	A	NB	15	40	300	9	136			
		WB	0	0	4	4	0	0	3	3	0	0	-1	-1	-25%	WB	0	0	11	A	A	B	11	B			WB						3	31	
		SB	0	905	129	1034	0	902	127	1029	0	-3	-2	-5	0%	SB	0	4	4	A	A	A	4	A			SB				4	113	1	10	175
		EB	0	0	0	0	0	0	0	0	0	0	0	0	0%	EB	0	0	0	A	A	A	0	A			EB								
Unsignalized	10: Southdale East Exit & Mall Circulation Rd	NB	0	0	0	0	0	0	0	0	0	0	0	0	0%	NB	0	0	0	A	A	A	0	A	1	A	NB								
		WB	0	0	0	0	0	0	0	0	0	0	0	0	0%	WB	0	0	0	A	A	A	0	A			WB								
		SB	211	113	0	324	219	108	0	327	8	-5	0	3	1%	SB	2	0	0	A	A	A	1	A			SB				1	12			
		EB	0	0	0	0	0	0	0	0	0	0	0	0	0%	EB	0	0	0	A	A	A	0	A			EB								
Signalized	11: 66th Street & York Avenue	NB	258	744	304	1306	252	754	307	1313	-6	10	3	7	1%	NB	48	18	3	D	B	A	20	C	35	D	NB	72	184	200	130	366	6	115	
		WB	393	823	82	1298	361	823	80	1264	-2	0	-2	-4	0%	WB	75	54	7	E	D	A	57	E			WB	170	361	300	336	486	28	250	300
		SB	78	429	117	624	81	418	120	619	3	-11	3	-5	-1%	SB	69	37	6	E	D	A	35	D			SB	66	161	150	126	230	41	125	75
		EB	192	711	222	1125	191	707	229	1127	-1	-4	7	2	0%	EB	66	69	11	E	E	B	57	E			EB	69	225	300	356	657	63	360	300

SimTraffic Simulation Summary
8/17/2012
2014 PM NO BUILD - Weekday
Measures of Effectiveness

Control	Intersection Location	Appr	Forecast Volumes L	T	R	Total	Modeled Volumes L	T	R	Total	Error Volumes L	T	R	Volume Error by Approach Total	%
Signalized	1: 69th Street & France Avenue	NB	180	1265	200	1645	188	1263	202	1653	8	-2	2	8	0%
		WB	150	222	90	462	136	219	89	444	-14	-3	-1	-18	-4%
		SB	110	815	35	960	100	797	35	932	-10	-18	0	-28	-3%
		EB	40	230	190	460	40	232	192	464	0	2	2	4	1%
Unsignalized	2: 69th Street & Southdale SW	NB	25	5	50	80	25	5	51	81	0	0	1	1	1%
		WB	45	237	100	382	41	236	90	367	-4	-1	-10	-15	-4%
		SB	105	15	195	315	102	13	193	308	-3	-2	-12	-17	-5%
		EB	0	522	25	547	0	524	24	548	0	2	-1	1	0%
Unsignalized	3: 69th Street & Southdale SE	NB	0	0	90	90	0	0	90	90	0	0	0	0	0%
		WB	75	306	75	456	75	292	80	447	0	-14	5	-9	-2%
		SB	0	0	75	75	0	0	75	75	0	0	0	0	0%
		EB	205	405	60	670	210	398	66	674	5	-7	6	4	1%
Unsignalized	4: 69th Street & Park & Ride Slip Ramp	NB	0	0	0	0	0	0	0	0	0	0	0	0	0%
		WB	0	456	45	501	0	448	46	494	0	-8	1	-7	-1%
		SB	0	0	0	0	0	0	0	0	0	0	0	0	0%
		EB	0	495	0	495	0	488	0	488	0	-7	0	-7	-1%
Signalized	5: 69th Street & York Avenue	NB	185	1019	40	1235	173	998	46	1217	-12	-12	6	-18	-1%
		WB	45	130	40	215	43	128	39	210	-2	-2	-1	-5	-2%
		SB	50	786	185	1021	48	787	192	1027	-2	1	7	6	1%
		EB	160	165	150	495	171	166	149	486	-9	1	-1	-9	-2%
Unsignalized	6: Mall Circulation Rd & Southdale SE	NB	280	1	0	281	290	1	0	291	10	0	0	10	4%
		WB	10	135	55	200	8	140	57	205	-2	5	2	5	3%
		SB	0	0	0	0	0	0	0	0	0	0	0	0	0%
		EB	0	0	65	65	0	0	66	66	0	0	1	1	2%
Unsignalized	7: Mall Circulation Rd & Park & Ride	NB	55	20	0	75	54	19	0	73	-1	-1	0	-2	-3%
		WB	0	145	5	150	0	151	7	158	0	6	2	8	5%
		SB	0	0	0	0	0	0	0	0	0	0	0	0	0%
		EB	0	0	0	0	0	0	0	0	0	0	0	0	0%
Signalized	8: Southdale East Exit & York Avenue	NB	0	1174	55	1229	0	1154	53	1207	0	-20	-2	-22	-2%
		WB	135	0	150	285	141	0	145	286	6	0	-5	1	0%
		SB	150	765	0	915	142	760	0	902	-8	-5	0	-13	-1%
		EB	160	21	120	301	166	23	128	317	6	2	8	16	5%
Unsignalized	9: Southdale East Entrance & York Avenue	NB	105	1330	0	1435	97	1315	0	1412	-8	-15	0	-23	-2%
		WB	0	0	5	5	0	0	5	5	0	0	0	0	0%
		SB	0	942	170	1112	0	929	179	1108	0	-13	9	-4	0%
		EB	0	0	0	0	0	0	0	0	0	0	0	0	0%
Unsignalized	10: Southdale East Exit & Mall Circulation Rd	NB	0	0	0	0	0	0	0	0	0	0	0	0	0%
		WB	0	0	0	0	0	0	0	0	0	0	0	0	0%
		SB	300	115	0	415	317	121	0	438	17	6	0	23	6%
		EB	0	0	0	0	0	0	0	0	0	0	0	0	0%
Signalized	11: 65th Street & York Avenue	NB	265	800	310	1375	264	802	300	1366	-1	2	-10	-9	-1%
		WB	370	860	85	1315	359	864	92	1315	-11	4	7	0	0%
		SB	80	490	120	690	77	499	122	698	-3	9	2	8	1%
		EB	195	750	225	1170	194	754	224	1172	-1	4	-1	2	0%

Appr	Total Delay by Movement (Sec/Veh) L	T	R	Level of Service by Movement L	T	R	LOS by Approach (Sec/Veh) Delay	LOS	LOS by Intersection (Sec/Veh) Delay	LOS
NB	56	22	5	E	C	A	24	C		
WB	59	55	4	E	F	A	46	D	30	C
SB	60	25	6	E	C	A	28	C		
EB	62	62	11	E	E	B	41	D		
NB	17	28	11	C	D	B	14	B		
WB	6	1	1	A	A	A	2	A	9	A
SB	20	28	8	C	D	A	14	B		
EB	0	3	3	A	A	A	3	A		
NB	0	0	6	A	A	A	6	A		
WB	3	1	0	A	A	A	1	A	3	A
SB	0	0	4	A	A	A	4	A		
EB	6	2	1	A	A	A	3	A		
NB	0	0	0	A	A	A	0	A		
WB	0	2	2	A	A	A	2	A	2	A
SB	0	0	0	A	A	A	0	A		
EB	0	3	0	A	A	A	3	A		
NB	67	21	18	E	C	B	30	C		
WB	70	115	78	E	F	F	99	F	36	D
SB	77	15	6	E	B	A	16	B		
EB	65	87	33	E	F	C	63	E		
NB	1	0	0	A	A	A	1	A		
WB	6	6	3	A	A	A	5	A	3	A
SB	0	0	0	A	A	A	0	A		
EB	0	0	0	A	A	A	0	A		
NB	3	4	0	A	A	A	3	A		
WB	0	0	0	A	A	A	0	A	1	A
SB	0	0	0	A	A	A	0	A		
EB	0	0	0	A	A	A	0	A		
NB	0	19	12	A	B	B	19	B		
WB	60	0	6	E	A	A	33	C	22	C
SB	62	7	0	E	A	A	16	B		
EB	55	54	1	E	D	A	33	C		
NB	10	4	0	B	A	A	4	A		
WB	0	0	8	A	A	A	8	A	4	A
SB	0	4	5	A	A	A	4	A		
EB	0	0	0	A	A	A	0	A		
NB	0	0	0	A	A	A	0	A		
WB	0	0	0	A	A	A	0	A	1	A
SB	2	0	0	A	A	A	1	A		
EB	0	0	0	A	A	A	0	A		
NB	48	27	4	D	C	A	28	C		
WB	61	39	4	E	D	A	43	D	36	D
SB	87	42	10	E	D	B	41	D		
EB	67	53	7	E	D	A	47	D		

Appr	Average & Maximum Traffic Queueing (feet) Left-Turn Ave Queue	Max Queue	Storage	Through Ave Queue	Max Queue	Right-Turn Ave Queue	Max Queue	Storage
NB	147	306	250	177	314	23	268	220
WB	120	253	250	97	211	23	150	100
SB	86	181	200	129	226	24	147	100
EB	39	119	150	105	212			
NB				25	105	31	85	50
WB	9	42	150		5			
SB				58	152	50	117	150
EB					5			
NB						40	97	
WB	1	16	100					
SB						32	60	
EB	11	67	155	1	28			
NB								
WB								
SB								
EB				18	152			
NB	100	160	100	269	568			
WB	45	142	100	108	225			
SB	49	112	120	117	291	27	150	100
EB	133	189	150	135	243			
NB				2	28			
WB				30	55			
SB								
EB							4	
NB				31	61			
WB								
SB								
EB								
NB				194	380			
WB	50	185	50			25	146	100
SB	116	235	200	90	241			
EB	73	136		23	113			
NB	30	90	300					
WB						5	28	
SB					3	2	39	175
EB								
NB								
WB								
SB				1	28			
EB								
NB	90	211	200	241	461	16	161	
WB	147	291	300	296	474	30	280	300
SB	71	177	150	179	318	51	126	75
EB	88	250	300	312	564	77	350	300

SimTraffic Simulation Summary
8/17/2012
2014 PM BUILD ALT 1 - Weekday
Measures of Effectiveness

Control	Intersection Location	Appr	Forecast Volumes L	T	R	Total	Modeled Volumes L	T	R	Total	Error Volumes L	T	R	Volume Error by Approach Total	%
Signalized	1: 69th Street & France Avenue	NB	180	1265	200	1645	171	1281	200	1652	-9	16	0	7	0%
		WB	150	200	90	440	153	199	88	440	3	-1	-2	0	0%
		SB	110	815	35	960	114	800	39	953	4	-15	4	-7	-1%
		EB	40	240	190	470	42	246	188	476	2	6	-2	6	1%
Unsignalized	2: 69th Street & Southdale SW	NB	25	5	50	80	26	3	55	84	1	-2	5	4	5%
		WB	45	220	100	365	43	214	106	363	-2	-6	6	-2	-1%
		SB	105	15	195	315	106	16	203	325	1	1	8	10	3%
		EB	0	532	25	557	0	544	28	572	0	12	3	15	3%
Unsignalized	3: 69th Street & Southdale SE	NB	0	0	90	90	0	0	84	84	0	0	-6	-6	-7%
		WB	75	316	125	516	68	316	123	507	-7	0	-2	-9	-2%
		SB	0	5	50	55	0	6	49	55	0	1	-1	0	0%
		EB	215	406	60	681	217	416	65	698	2	10	5	17	2%
Unsignalized	4: 69th Street & Park & Ride Slip Ramp	NB	0	0	0	0	0	0	0	0	0	0	0	0	0%
		WB	0	506	5	511	0	502	9	511	0	-4	4	0	0%
		SB	0	0	10	10	0	0	9	9	0	0	-1	-1	-10%
		EB	0	495	0	495	0	500	0	500	0	5	0	5	1%
Signalized	5: 69th Street & York Avenue	NB	185	1030	40	1255	187	1047	42	1276	2	17	2	21	2%
		WB	45	140	40	225	46	130	42	218	1	-10	2	-7	-3%
		SB	50	830	185	1065	47	813	188	1048	-3	-17	3	-17	-2%
		EB	180	165	150	495	173	169	158	500	-7	4	8	5	1%
Unsignalized	6: Mall Circulation Rd & Southdale SE	NB	260	46	15	341	267	41	14	342	7	-5	-1	1	0%
		WB	20	136	55	211	20	137	59	216	0	1	4	5	2%
		SB	0	0	0	0	0	0	0	0	0	0	0	0	0%
		EB	0	35	35	70	0	35	35	70	0	0	0	0	0%
Unsignalized	7: Mall Circulation Rd & Park & Ride	NB	10	0	25	35	10	0	25	35	0	0	0	0	0%
		WB	35	266	5	306	33	262	5	300	-2	-4	0	-6	-2%
		SB	20	0	55	75	22	0	60	82	2	0	5	7	9%
		EB	0	35	15	50	0	36	13	49	0	1	-2	-1	-2%
Signalized	8: Southdale East Exit & York Avenue	NB	70	1124	55	1249	66	1130	53	1249	-4	6	-2	0	0%
		WB	135	15	135	285	128	15	136	279	-7	0	1	-6	-2%
		SB	150	765	105	1020	136	760	110	1006	-14	-5	5	-14	-1%
		EB	175	21	165	361	173	22	172	367	-2	1	7	6	2%
Unsignalized	9: Southdale East Entrance & York Avenue	NB	40	1346	0	1386	40	1339	0	1379	0	-7	0	-7	-1%
		WB	0	0	5	5	0	0	5	5	0	0	0	0	0%
		SB	0	1048	85	1133	0	1032	82	1114	0	-16	-3	-19	-2%
		EB	0	0	0	0	0	0	0	0	0	0	0	0	0%
Unsignalized	10: Southdale East Exit & Mall Circulation Rd	NB	0	25	55	80	0	28	55	83	0	3	0	3	4%
		WB	190	1	0	191	189	1	0	190	-1	0	0	-1	-1%
		SB	300	115	0	415	306	111	0	417	6	-4	0	2	0%
		EB	0	0	0	0	0	0	0	0	0	0	0	0	0%
Signalized	11: 66th Street & York Avenue	NB	265	815	310	1390	268	813	310	1391	3	-2	0	1	0%
		WB	370	860	85	1315	363	834	93	1290	-7	-26	8	-25	-2%
		SB	80	510	120	710	77	497	122	696	-3	-13	2	-14	-2%
		EB	195	750	225	1170	196	739	226	1157	1	-15	1	-13	-1%

Control	Intersection Location	Appr	Total Delay by Movement (Sec/Veh) L	T	R	Level of Service by Movement L	T	R	LOS by Approach (Sec/Veh) Delay	LOS	LOS by Intersection (Sec/Veh) Delay	LOS
Signalized	1: 69th Street & France Avenue	NB	48	22	5	D	C	A	23	C	30	C
		WB	60	60	4	E	E	A	49	D		
		SB	58	28	8	E	C	A	31	C		
		EB	58	59	9	E	E	A	30	D		
Unsignalized	2: 69th Street & Southdale SW	NB	17	32	11	C	D	B	14	B	6	A
		WB	7	1	1	A	A	A	2	A		
		SB	21	19	9	C	C	A	13	B		
		EB	0	3	3	A	A	A	3	A		
Unsignalized	3: 69th Street & Southdale SE	NB	0	0	6	A	A	A	6	A	3	A
		WB	5	1	0	A	A	A	1	A		
		SB	0	0	4	A	A	A	4	A		
		EB	9	2	1	A	A	A	4	A		
Unsignalized	4: 69th Street & Park & Ride Slip Ramp	NB	0	0	0	A	A	A	0	A	2	A
		WB	0	2	1	A	A	A	2	A		
		SB	0	0	1	A	A	A	1	A		
		EB	0	3	0	A	A	A	3	A		
Signalized	5: 69th Street & York Avenue	NB	91	20	17	E	C	B	30	C	36	D
		WB	62	118	77	E	E	E	66	E		
		SB	83	15	6	F	B	A	16	B		
		EB	65	92	34	F	E	C	64	E		
Unsignalized	6: Mall Circulation Rd & Southdale SE	NB	1	0	0	A	A	A	1	A	3	A
		WB	8	8	4	A	A	A	7	A		
		SB	0	0	0	A	A	A	0	A		
		EB	0	8	3	A	A	A	6	A		
Unsignalized	7: Mall Circulation Rd & Park & Ride	NB	4	0	2	A	A	A	3	A	2	A
		WB	2	1	0	A	A	A	1	A		
		SB	5	0	3	A	A	A	4	A		
		EB	0	2	2	A	A	A	2	A		
Signalized	8: Southdale East Exit & York Avenue	NB	64	41	32	E	D	C	42	D	43	D
		WB	83	123	14	E	E	B	52	D		
		SB	94	37	38	F	D	D	45	D		
		EB	50	52	11	D	D	B	32	C		
Unsignalized	9: Southdale East Entrance & York Avenue	NB	9	4	0	A	A	A	4	A	5	A
		WB	0	0	10	A	A	B	10	B		
		SB	0	5	5	A	A	A	5	A		
		EB	0	0	0	A	A	A	0	A		
Unsignalized	10: Southdale East Exit & Mall Circulation Rd	NB	0	0	11	A	A	B	7	A	12	B
		WB	1	0	0	A	A	A	1	A		
		SB	21	8	0	C	A	A	16	C		
		EB	0	0	0	A	A	A	0	A		
Signalized	11: 66th Street & York Avenue	NB	51	27	4	D	C	A	26	C	36	D
		WB	63	38	4	E	D	A	43	D		
		SB	80	44	10	F	D	B	42	D		
		EB	66	50	6	E	D	A	44	D		

Control	Intersection Location	Appr	Average & Maximum Traffic Queueing (feet) Left-Turn Ave Queue	Max Queue	Storage	Through Ave Queue	Max Queue	Right-Turn Ave Queue	Max Queue	Storage
Signalized	1: 69th Street & France Avenue	NB	126	251	250	159	283	21	214	220
		WB	124	258	250	91	222	18	150	100
		SB	102	210	200	136	273	22	150	100
		EB	43	157	150	110	231			
Unsignalized	2: 69th Street & Southdale SW	NB				22	65	30	73	50
		WB	12	54	150		3			
		SB				60	129	53	110	150
		EB					5			
Unsignalized	3: 69th Street & Southdale SE	NB						37	88	
		WB	3	27	100					
		SB						27	60	
		EB	27	126	155	1	26			
Unsignalized	4: 69th Street & Park & Ride Slip Ramp	NB								
		WB								
		SB						1	26	
		EB				18	130			
Signalized	5: 69th Street & York Avenue	NB	100	160	100	295	585			
		WB	50	140	100	112	217			
		SB	47	98	120	111	389	14	140	100
		EB	148	149	150	148	238			
Unsignalized	6: Mall Circulation Rd & Southdale SE	NB				13	54			
		WB				37	90			
		SB								
		EB				31	68			
Unsignalized	7: Mall Circulation Rd & Park & Ride	NB	22	59						
		WB				1	18			
		SB	32	60						
		EB								
Signalized	8: Southdale East Exit & York Avenue	NB	78	301	300	281	481			
		WB	63	149	100	104	259	68	150	100
		SB	137	240	200	264	569			
		EB				124	140	54	122	
Unsignalized	9: Southdale East Entrance & York Avenue	NB	14	47	300		3			
		WB						5	30	
		SB				4	60		13	175
		EB								
Unsignalized	10: Southdale East Exit & Mall Circulation Rd	NB						31	66	
		WB	1	13						
		SB	106	253	250	47	267			
		EB								
Signalized	11: 66th Street & York Avenue	NB	69	213	200	242	436	18	227	
		WB	152	302	300	287	471	20	280	300
		SB	70	169	150	174	323	44	128	75
		EB	84	249	300	283	456	70	380	300

A134

SimTraffic Simulation Summary
8/17/2012
2014 PM BUILD ALT 2 - Weekday
Measures of Effectiveness

Intersection Control	Location	Appr	Forecast Volumes L	T	R	Total	Modeled Volumes L	T	R	Total	Error Volumes L	T	R	Volume Error by Approach Total	%
Signalized	1: 69th Street & France Avenue	NB	180	1265	200	1645	186	1254	197	1637	6	-11	-3	-8	0%
		WB	150	237	90	477	141	250	93	484	-9	13	3	7	1%
		SB	110	815	35	960	106	852	31	989	-4	37	-4	29	3%
		EB	40	240	190	470	42	227	191	460	2	-13	1	-10	-2%
Unsignalized	2: 69th Street & Southdale SW	NB	25	5	50	80	26	5	51	82	1	0	1	2	3%
		WB	45	256	100	401	49	263	96	408	4	7	-4	7	2%
		SB	53	15	195	263	51	17	197	265	-2	2	2	2	1%
		EB	108	424	25	557	109	399	30	537	0	-25	5	-20	-4%
Unsignalized	3: 69th Street & Southdale SE	NB	36	18	36	90	37	19	39	95	1	1	3	5	6%
		WB	75	316	125	516	71	317	128	516	-4	1	3	0	0%
		SB	53	5	50	108	50	6	56	112	-3	1	6	4	4%
		EB	108	354	60	522	101	333	62	496	-7	-21	2	-26	-5%
Unsignalized	4: 69th Street & Park & Ride Slip Ramp	NB	0	0	0	0	0	0	0	0	0	0	0	0	0%
		WB	0	506	5	511	0	508	6	514	0	2	1	3	1%
		SB	0	0	10	10	0	0	11	11	0	0	1	1	10%
		EB	0	442	0	442	0	423	0	423	0	-19	0	-19	-4%
Signalized	6: 69th Street & York Avenue	NB	185	1030	40	1255	185	1031	44	1260	0	1	4	5	0%
		WB	45	140	40	225	45	141	39	225	0	1	-1	0	0%
		SB	50	830	185	1065	48	831	187	1066	-2	1	2	1	0%
		EB	180	111	150	441	173	114	137	424	-7	3	-13	-17	-4%
Unsignalized	6: Mall Circulation Rd & Southdale SE	NB	173	63	15	251	175	60	12	247	2	-3	-3	-4	-2%
		WB	20	136	55	211	19	128	59	206	-1	-8	4	-5	-2%
		SB	0	0	0	0	0	0	0	0	0	0	0	0	0%
		EB	0	35	88	123	0	33	94	127	0	-2	6	4	3%
Unsignalized	7: Mall Circulation Rd & Park & Ride	NB	10	0	25	35	11	0	27	38	1	0	2	3	9%
		WB	35	266	5	306	31	267	5	303	-4	1	0	-3	-1%
		SB	20	0	55	75	20	0	53	73	0	0	-2	-2	-3%
		EB	0	35	15	50	0	32	13	45	0	-3	-2	-5	-10%
Signalized	8: Southdale East Exit & York Avenue	NB	70	1124	55	1249	70	1109	54	1233	0	-15	-1	-16	-1%
		WB	135	15	135	285	137	16	138	291	2	1	3	6	2%
		SB	150	765	105	1020	141	763	106	1010	-9	-2	1	-10	-1%
		EB	175	21	165	361	176	20	177	378	0	5	12	17	5%
Unsignalized	9: Southdale East Entrance & York Avenue	NB	40	1346	0	1386	39	1322	0	1361	-1	-24	0	-25	-2%
		WB	0	0	5	5	0	0	6	6	0	0	1	1	20%
		SB	0	1048	85	1133	0	1036	83	1119	0	-12	-2	-14	-1%
		EB	0	0	0	0	0	0	0	0	0	0	0	0	0%
Unsignalized	10: Southdale East Exit & Mall Circulation Rd	NB	0	25	55	80	0	25	54	79	0	0	-1	-1	-1%
		WB	190	1	0	191	188	0	0	188	-2	-1	0	-3	-2%
		SB	300	115	0	415	319	115	0	434	19	0	0	19	5%
		EB	0	0	0	0	0	0	0	0	0	0	0	0	0%
Signalized	11: 66th Street & York Avenue	NB	265	815	310	1390	258	808	310	1376	-7	-7	0	-14	-1%
		WB	370	660	85	1315	368	872	92	1332	-2	12	7	17	1%
		SB	80	510	120	710	78	502	115	695	-2	-8	-5	-15	-2%
		EB	195	750	225	1170	178	733	230	1141	-17	-17	5	-29	-2%

Appr	Total Delay by Movement (Sec/Veh) L	T	R	Level of Service by Movement L	T	R	LOS by Approach (Sec/Veh) Delay	LOS	LOS by Intersection (Sec/Veh) Delay	LOS
NB	35	39	9	D	D	A	35	C	40	D
WB	37	48	3	D	D	A	36	D		
SB	43	57	26	D	E	C	55	D		
EB	38	43	9	D	D	A	28	C		
NB	2	1	2	A	A	A	2	A	5	A
WB	4	5	4	A	A	A	5	A		
SB	4	3	5	A	A	A	5	A		
EB	4	5	4	A	A	A	5	A		
NB	3	2	2	A	A	A	2	A	6	A
WB	7	6	7	A	A	A	6	A		
SB	2	1	2	A	A	A	2	A		
EB	5	6	5	A	A	A	6	A		
NB	0	0	0	A	A	A	0	A	4	A
WB	0	4	4	A	A	A	4	A		
SB	0	0	7	A	A	A	7	A		
EB	0	3	0	A	A	A	3	A		
NB	97	22	15	E	C	B	33	C	54	D
WB	66	116	92	E	F	E	102	F		
SB	64	15	6	E	B	A	16	B		
EB	61	97	31	E	E	C	61	E		
NB	1	0	0	A	A	A	1	A	3	A
WB	7	7	4	A	A	A	6	A		
SB	0	0	0	A	A	A	0	A		
EB	0	8	3	A	A	A	4	A		
NB	3	0	2	A	A	A	2	A	2	A
WB	2	1	0	A	A	A	1	A		
SB	5	0	3	A	A	A	4	A		
EB	0	2	1	A	A	A	2	A		
NB	60	40	33	E	D	C	41	D	43	D
WB	87	138	19	F	F	B	58	F		
SB	95	38	38	F	D	D	46	D		
EB	52	53	11	D	D	B	33	C		
NB	10	4	0	B	A	A	4	A	5	A
WB	0	0	10	A	A	B	10	B		
SB	0	5	5	A	A	A	5	A		
EB	0	0	0	A	A	A	0	A		
NB	0	1	13	A	A	B	9	A	16	C
WB	0	0	0	A	A	A	0	A		
SB	30	8	0	D	A	A	24	C		
EB	0	0	0	A	A	A	0	A		
NB	48	27	4	D	C	A	26	C	39	D
WB	64	40	5	E	D	A	44	D		
SB	78	43	10	E	D	B	41	D		
EB	68	55	8	E	E	A	48	D		

Average & Maximum Traffic Queueing (feet)

Appr	Left-Turn Ave Queue	Max Queue	Storage	Through Ave Queue	Max Queue	Right-Turn Ave Queue	Max Queue	Storage
NB	109	246	250	238	561	44	376	220
WB	92	197	250	96	210	14	118	100
SB	84	223	200	223	463	14	143	100
EB	37	131	150	87	180			
NB				31	60			
WB				31	89			
SB				14	60	11	50	100
EB				57	155			
NB				19	70			
WB				72	163			
SB				20	60			
EB				34	142			
NB								
WB				27	112			
SB						3	23	
EB				27	185			
NB	100	160	100	315	611			
WB	50	149	100	121	228			
SB	48	104	120	108	340	14	148	100
EB	140	199	150	114	236			
NB				6	29			
WB				37	82			
SB								
EB				38	74			
NB	24	65						
WB				1	18			
SB	30	55						
EB								
NB	77	308	300	272	463			
WB	65	170	150	118	265	76	180	100
SB	147	260	200	273	507			
EB				126	139	59	137	
NB	17	58	300					
WB						5	30	
SB				2	20		4	175
EB								
NB						32	100	
WB		3						
SB	137	276	250	68	292			
EB								
NB	84	204	200	242	483	26	274	
WB	155	299	300	306	486	25	280	300
SB	70	129	150	172	339	41	125	75
EB	76	223	300	315	603	52	350	300

A139

SimTraffic Simulation Summary
8/17/2012
2030 PM NO BUILD - Weekday
Measures of Effectiveness

Intersection Control	Location	Appr	Forecast Volumes L	T	R	Total	Modeled Volumes L	T	R	Total	Error Volumes L	T	R	Volume Error by Approach Total	%	Appr	Total Delay by Movement (Sec/Veh) L	T	R	Level of Service by Movement L	T	R	LOS by Approach (Sec/Veh) Delay	LOS	LOS by Intersection (Sec/Veh) Delay	LOS	Appr	Average & Maximum Traffic Queueing (feet) Left-Turn Ave Queue	Max Queue	Storage	Through Ave Queue	Max Queue	Right-Turn Ave Queue	Max Queue	Storage
Signalized	1: 69th Street & France Avenue	NB	195	1370	200	1765	194	1347	191	1732	-1	-23	-9	-33	-2%	NB	58	23	5	E	C	A	25	C	31	C	NB	153	299	250	195	360	58	279	220
		WB	150	222	90	462	153	231	93	477	3	9	3	15	3%	WB	54	51	3	D	D	A	43	D			WB	129	308	250	88	210	24	150	100
		SB	110	665	35	1030	104	898	35	1037	-6	13	0	7	1%	SB	65	28	8	E	C	A	31	C			SB	96	319	200	158	274	21	130	100
		EB	40	230	205	475	33	222	200	455	-7	-8	-5	-20	-4%	EB	67	65	14	E	E	B	43	D			EB	37	114	150	105	205			
Unsignalized	2: 69th Street & Southdale SW	NB	25	5	50	80	24	5	45	74	-1	0	-5	-6	-8%	NB	17	36	10	C	E	B	14	B	6	A	NB				23	68	27	94	50
		WB	45	237	100	382	49	236	97	384	4	1	-3	2	1%	WB	7	1	1	A	A	A	2	A			WB	11	48	150		3			
		SB	105	15	195	315	101	14	211	326	-4	-1	16	11	3%	SB	34	28	9	C	D	A	14	B			SB				62	151	55	127	150
		EB	0	522	25	547	0	499	26	525	0	-23	1	-22	-4%	EB	0	3	3	A	A	A	3	A			EB					5			
Unsignalized	3: 69th Street & Southdale SE	NB	0	0	90	90	0	0	90	90	0	0	0	0	0%	NB	0	0	5	A	A	A	5	A	3	A	NB						38	74	
		WB	75	306	75	456	72	314	83	469	-3	8	6	13	3%	WB	3	1	0	A	A	A	1	A			WB	1	22	100					
		SB	0	0	75	75	0	1	71	72	0	1	-4	-3	-4%	SB	0	0	4	A	A	A	4	A			SB						32	68	
		EB	205	405	60	670	192	391	59	642	-13	-14	-1	-28	-4%	EB	5	2	1	A	A	A	3	A			EB	6	39	155		7			
Unsignalized	4: 69th Street & Park & Ride Slip Ramp	NB	0	0	0	0	0	0	0	0	0	0	0	0	0%	NB	0	0	0	A	A	A	0	A	2	A	NB								
		WB	0	456	45	501	0	472	47	519	0	16	2	18	4%	WB	0	2	2	A	A	A	2	A			WB				2	60			
		SB	0	0	0	0	0	0	0	0	0	0	0	0	0%	SB	0	0	0	A	A	A	0	A			SB								
		EB	0	405	0	405	0	481	0	481	0	-14	0	-14	-3%	EB	0	3	0	A	A	A	3	A			EB				16	128			
Signalized	5: 69th Street & York Avenue	NB	165	1100	40	1325	195	1084	41	1320	10	-16	1	-5	0%	NB	107	26	21	E	C	C	38	D	38	D	NB	100	160	100	367	638			
		WB	45	130	40	215	45	130	40	215	0	0	0	0	0%	WB	63	115	77	E	E	E	97	E			WB	51	114	100	113	237			
		SB	50	876	185	1111	49	887	191	1127	-1	11	6	16	1%	SB	78	16	7	E	B	A	17	B			SB	52	148	120	149	403	32	150	100
		EB	180	165	150	495	171	161	148	480	-9	-4	-2	-15	-3%	EB	64	84	37	E	E	D	62	E			EB	140	199	150	138	249			
Unsignalized	6: Mall Circulation Rd & Southdale SE	NB	280	1	0	281	274	1	0	275	-6	0	0	-6	-2%	NB	1	1	0	A	A	A	1	A	2	A	NB				2	25			
		WB	10	135	55	200	12	130	56	198	2	-5	1	-2	-1%	WB	7	6	3	A	A	A	5	A			WB				30	56			
		SB	0	0	0	0	0	0	0	0	0	0	0	0	0%	SB	0	0	0	A	A	A	0	A			SB								
		EB	0	0	65	65	0	0	59	59	0	0	-6	-6	-9%	EB	0	0	0	A	A	A	0	A			EB								
Unsignalized	7: Mall Circulation Rd & Park & Ride	NB	55	20	0	75	56	17	0	73	1	-3	0	-2	-3%	NB	3	4	0	A	A	A	3	A	1	A	NB				30	58			
		WB	0	145	5	150	0	141	5	146	0	-4	0	-4	-3%	WB	0	0	0	A	A	A	0	A			WB								
		SB	0	0	0	0	0	0	0	0	0	0	0	0	0%	SB	0	0	0	A	A	A	0	A			SB								
		EB	0	0	0	0	0	0	0	0	0	0	0	0	0%	EB	0	0	0	A	A	A	0	A			EB								
Signalized	8: Southdale East Exit & York Avenue	NB	0	1265	55	1320	0	1231	53	1284	0	-34	-2	-36	-3%	NB	0	16	9	A	B	A	16	B	22	C	NB				158	372			
		WB	135	0	150	285	130	0	143	273	-5	0	-7	-12	-4%	WB	61	0	5	E	A	A	32	C			WB	50	136	50			10	85	100
		SB	150	855	0	1005	152	867	0	1019	2	12	0	14	1%	SB	63	6	0	E	A	A	15	B			SB	117	233	200	72	270			
		EB	160	21	120	301	158	21	132	311	-2	0	12	10	3%	EB	54	53	0	D	D	A	31	C			EB	71	134		25	126			
Unsignalized	9: Southdale East Entrance & York Avenue	NB	105	1410	0	1515	97	1374	0	1471	-8	-36	0	-44	-3%	NB	10	3	0	B	A	A	3	A	4	A	NB	36	93	300	1	33			
		WB	0	0	5	5	0	0	4	4	0	0	-1	-1	-20%	WB	0	0	12	A	A	B	12	B			WB						4	30	
		SB	0	1034	170	1204	0	1049	172	1221	0	15	2	17	1%	SB	0	4	5	A	A	A	4	A			SB				4	116	2	26	175
		EB	0	0	0	0	0	0	0	0	0	0	0	0	0%	EB	0	0	0	A	A	A	0	A			EB								
Unsignalized	10: Southdale East Exit & Mall Circulation Rd	NB	0	0	0	0	0	0	0	0	0	0	0	0	0%	NB	0	0	0	A	A	A	0	A	1	A	NB								
		WB	0	0	0	0	0	0	0	0	0	0	0	0	0%	WB	0	0	0	A	A	A	0	A			WB								
		SB	300	115	0	415	309	114	0	423	9	-1	0	8	2%	SB	2	0	0	A	A	A	1	A			SB	1	17	250	2	32			
		EB	0	0	0	0	0	0	0	0	0	0	0	0	0%	EB	0	0	0	A	A	A	0	A			EB								
Signalized	11: 66th Street & York Avenue	NB	280	846	330	1456	270	833	330	1433	-10	-13	0	-23	-2%	NB	54	33	5	D	C	A	31	C	43	D	NB	103	225	200	291	560	62	328	
		WB	400	935	95	1430	414	916	100	1430	14	-19	5	0	0%	WB	65	42	6	E	D	A	46	D			WB	179	332	300	328	566	40	348	300
		SB	90	530	130	750	93	532	131	756	3	2	1	6	1%	SB	78	46	13	E	D	B	44	D			SB	88	197	150	198	369	53	125	75
		EB	215	815	245	1275	217	823	246	1286	2	8	1	11	1%	EB	71	63	12	E	E	B	55	D			EB	104	259	300	397	702	87	350	300

SimTraffic Simulation Summary
8/17/2012
2030 PM BUILD ALT 1 - Weekday
Measures of Effectiveness

Control	Intersection Location	Appr	Forecast Volumes L	T	R	Total	Modeled Volumes L	T	R	Total	Error Volumes L	T	R	Volume Error by Approach Total	%
Signalized	1: 69th Street & France Avenue	NB	195	1370	200	1765	198	1362	203	1763	3	-8	3	-2	0%
		WB	150	200	90	440	157	197	91	445	7	-3	1	5	1%
		SB	110	885	35	1030	107	878	34	1019	-3	-7	-1	-11	-1%
		EB	40	240	205	485	42	238	213	493	2	-2	8	8	2%
Unsignalized	2: 69th Street & Southdale SW	NB	25	5	50	80	27	5	47	79	2	0	-3	-1	-1%
		WB	45	220	100	365	40	215	105	360	-5	-5	5	-5	-1%
		SB	105	15	195	315	104	15	203	322	-1	0	8	7	2%
		EB	0	532	25	557	0	529	24	553	0	-3	-1	-4	-1%
Unsignalized	3: 69th Street & Southdale SE	NB	0	0	90	90	0	0	90	90	0	0	0	0	0%
		WB	75	316	125	516	71	312	128	511	-4	-4	3	-5	-1%
		SB	0	5	50	55	0	8	50	58	0	3	0	3	5%
		EB	215	406	60	681	222	395	59	676	7	-11	-1	-5	-1%
Unsignalized	4: 69th Street & Park & Ride Slip Ramp	NB	0	0	0	0	0	0	0	0	0	0	0	0	0%
		WB	0	506	5	511	0	499	7	506	0	-7	2	-5	-1%
		SB	0	0	10	10	0	0	12	12	0	0	2	2	20%
		EB	0	495	0	495	0	483	0	483	0	-12	0	-12	-2%
Signalized	5: 69th Street & York Avenue	NB	165	1120	40	1345	163	1115	43	1341	-2	-5	3	-4	0%
		WB	45	140	40	225	44	141	38	223	-1	1	-2	-2	-1%
		SB	50	920	165	1155	50	892	180	1122	0	-28	-5	-33	-3%
		EB	180	165	150	495	165	169	149	483	-15	4	-1	-12	-2%
Unsignalized	6: Mall Circulation Rd & Southdale SE	NB	280	48	15	341	290	48	16	352	10	0	1	11	3%
		WB	20	135	55	210	19	126	55	200	-1	-9	0	-10	-5%
		SB	0	0	0	0	0	0	0	0	0	0	0	0	0%
		EB	0	35	35	70	0	29	38	67	0	-6	3	-3	-4%
Unsignalized	7: Mall Circulation Rd & Park & Ride	NB	10	0	25	35	9	0	27	36	-1	0	2	1	3%
		WB	35	266	5	306	33	266	5	304	-2	0	0	-2	-1%
		SB	0	0	0	0	0	0	0	0	0	0	0	0	0%
		EB	0	35	15	50	0	32	13	45	0	-3	-2	-5	-10%
Signalized	8: Southdale East Exit & York Avenue	NB	70	1214	55	1339	69	1189	56	1314	-1	-25	1	-25	-2%
		WB	135	15	135	285	123	16	132	271	-12	1	-3	-14	-5%
		SB	150	656	105	1111	145	651	109	1105	-5	-5	4	-6	-1%
		EB	175	21	165	361	179	18	165	362	4	-3	0	1	0%
Unsignalized	9: Southdale East Entrance & York Avenue	NB	40	1426	0	1466	35	1398	0	1433	-5	-28	0	-33	-2%
		WB	0	0	5	5	0	0	6	6	0	0	1	1	20%
		SB	0	1140	85	1225	0	1132	87	1219	0	-8	2	-6	0%
		EB	0	0	0	0	0	0	0	0	0	0	0	0	0%
Unsignalized	10: Southdale East Exit & Mall Circulation Rd	NB	0	5	55	60	0	5	54	59	0	0	-1	-1	-2%
		WB	190	1	0	191	190	1	0	191	0	0	0	0	0%
		SB	300	115	0	415	299	113	0	412	-1	-2	0	-3	-1%
		EB	0	0	0	0	0	0	0	0	0	0	0	0	0%
Signalized	11: 66th Street & York Avenue	NB	280	862	330	1472	277	853	327	1457	-3	-9	-3	-15	-1%
		WB	400	935	99	1430	393	946	95	1434	-7	11	0	4	0%
		SB	90	550	130	770	92	545	132	769	2	-5	2	-1	0%
		EB	215	815	245	1275	204	826	251	1280	-11	10	6	5	0%

Control	Intersection Location	Appr	Total Delay by Movement (Sec/Veh) L	T	R	Level of Service by Movement L	T	R	LOS by Approach (Sec/Veh) Delay	LOS	LOS by Intersection (Sec/Veh) Delay	LOS
Signalized	1: 69th Street & France Avenue	NB	57	23	5	E	C	A	25	C	31	C
		WB	58	60	3	E	E	A	48	D		
		SB	66	27	9	E	C	A	30	C		
		EB	63	60	13	E	E	B	40	D		
Unsignalized	2: 69th Street & Southdale SW	NB	17	23	10	C	C	B	13	B	8	A
		WB	8	1	1	A	A	A	2	A		
		SB	20	28	9	C	D	A	13	B		
		EB	0	3	3	A	A	A	3	A		
Unsignalized	3: 69th Street & Southdale SE	NB	0	0	5	A	A	A	5	A	3	A
		WB	4	1	0	A	A	A	1	A		
		SB	0	0	4	A	A	A	3	A		
		EB	8	2	1	A	A	A	4	A		
Unsignalized	4: 69th Street & Park & Ride Slip Ramp	NB	0	0	0	A	A	A	0	A	2	A
		WB	0	2	2	A	A	A	2	A		
		SB	0	0	2	A	A	A	2	A		
		EB	0	3	0	A	A	A	3	A		
Signalized	5: 69th Street & York Avenue	NB	96	23	20	E	C	C	33	C	36	D
		WB	67	110	77	E	E	E	96	E		
		SB	65	15	6	E	B	A	16	B		
		EB	67	85	32	E	E	C	63	E		
Unsignalized	6: Mall Circulation Rd & Southdale SE	NB	1	1	0	A	A	A	1	A	3	A
		WB	8	8	4	A	A	A	7	A		
		SB	0	0	0	A	A	A	0	A		
		EB	0	9	3	A	A	A	6	A		
Unsignalized	7: Mall Circulation Rd & Park & Ride	NB	3	0	2	A	A	A	2	A	2	A
		WB	2	0	0	A	A	A	0	A		
		SB	0	0	0	A	A	A	0	A		
		EB	0	2	1	A	A	A	2	A		
Signalized	8: Southdale East Exit & York Avenue	NB	83	43	33	F	D	C	45	D	50	D
		WB	125	233	42	F	F	D	91	F		
		SB	123	41	40	E	D	D	52	D		
		EB	55	44	11	E	D	B	34	C		
Unsignalized	9: Southdale East Entrance & York Avenue	NB	11	4	0	B	A	A	4	A	5	A
		WB	0	0	10	A	A	B	10	B		
		SB	0	6	5	A	A	A	6	A		
		EB	0	0	0	A	A	A	0	A		
Unsignalized	10: Southdale East Exit & Mall Circulation Rd	NB	0	0	11	A	A	B	10	B	14	B
		WB	0	0	0	A	A	A	0	A		
		SB	25	8	0	D	A	A	20	C		
		EB	0	0	0	A	A	A	0	A		
Signalized	11: 66th Street & York Avenue	NB	53	30	5	D	C	A	29	C	43	D
		WB	62	42	6	E	D	A	45	D		
		SB	71	45	11	E	D	B	42	D		
		EB	67	62	12	E	E	B	53	D		

Control	Intersection Location	Appr	Average & Maximum Traffic Queueing (feet) Left-Turn Ave Queue	Left-Turn Max Queue	Left-Turn Storage	Through Ave Queue	Through Max Queue	Right-Turn Ave Queue	Right-Turn Max Queue	Right-Turn Storage
Signalized	1: 69th Street & France Avenue	NB	156	284	250	191	350	44	270	220
		WB	138	260	250	95	224	18	146	100
		SB	95	212	200	153	269	21	158	100
		EB	41	124	150	104	197			
Unsignalized	2: 69th Street & Southdale SW	NB				26	96	29	88	50
		WB	10	39	150		4			
		SB				58	125	54	106	150
		EB				1	16			
Unsignalized	3: 69th Street & Southdale SE	NB						39	85	
		WB	2	29	100					
		SB						28	64	
		EB	22	127	155	3	50			
Unsignalized	4: 69th Street & Park & Ride Slip Ramp	NB								
		WB								
		SB						3	26	
		EB				21	130			
Signalized	5: 69th Street & York Avenue	NB	100	150	100	338	629			
		WB	52	149	100	111	216			
		SB	49	107	120	112	324	26	190	100
		EB	136	159	150	134	241			
Unsignalized	6: Mall Circulation Rd & Southdale SE	NB				8	49			
		WB				43	86			
		SB								
		EB				31	67			
Unsignalized	7: Mall Circulation Rd & Park & Ride	NB	24	65						
		WB				2	34			
		SB								
		EB								
Signalized	8: Southdale East Exit & York Avenue	NB	84	306	300	299	510			
		WB	56	149	100	121	279	66	148	100
		SB	166	250	200	325	587			
		EB				125	139	57	126	
Unsignalized	9: Southdale East Entrance & York Avenue	NB	16	67	300					
		WB						5	30	
		SB				15	174	2	54	175
		EB								
Unsignalized	10: Southdale East Exit & Mall Circulation Rd	NB						32	70	
		WB		6						
		SB	125	274	250	57	274			
		EB								
Signalized	11: 66th Street & York Avenue	NB	93	211	200	278	502	42	260	
		WB	163	290	300	347	503	42	260	300
		SB	75	193	150	198	385	47	125	75
		EB	97	248	300	401	721	67	240	300

Alt 1

SimTraffic Simulation Summary
8/17/2012
2030 PM BUILD ALT 2 - Weekday
Measures of Effectiveness

Intersection Control	Location	Appr	Forecast Volumes L	T	R	Total	Modeled Volumes L	T	R	Total	Error Volumes L	T	R	Volume Error by Approach Total	%	Appr	Total Delay by Movement (Sec/Veh) L	T	R	Level of Service by Movement L	T	R	LOS by Approach (Sec/Veh) Delay	LOS	LOS by Intersection (Sec/Veh) Delay	LOS	Appr	Average & Maximum Traffic Queueing (feet) Left-Turn Ave Queue	Left-Turn Max Queue	Left-Turn Storage	Through Ave Queue	Through Max Queue	Right-Turn Ave Queue	Right-Turn Max Queue	Right-Turn Storage
Signalized	1: 69th Street & France Avenue	NB	180	1265	200	1645	186	1254	197	1637	6	-11	-3	-8	0%	NB	35	39	9	D	D	A	35	C			NB	109	246	250	238	561	44	270	220
		WB	150	237	90	477	141	250	93	484	-9	13	3	7	1%	WB	37	48	3	D	D	A	36	D	40	D	WB	92	197	250	96	210	14	148	100
		SB	110	815	35	960	106	852	31	989	-4	37	-4	29	3%	SB	43	57	29	D	E	C	55	D			SB	84	213	200	223	483	14	149	100
		EB	40	240	190	470	42	227	191	460	2	-13	1	-10	-2%	EB	36	43	9	D	D	A	26	C			EB	37	131	150	87	180			
Unsignalized	2: 69th Street & Southdale SW	NB	25	5	50	80	26	5	51	82	1	0	1	2	3%	NB	2	1	2	A	A	A	2	A			NB				21	60			
		WB	45	256	100	401	49	263	99	408	4	7	-4	7	2%	WB	4	5	4	A	A	A	5	A	5	A	WB				31	88			
		SB	53	16	105	263	51	17	197	265	-2	2	2	2	1%	SB	4	3	5	A	A	A	5	A			SB				14	60	11	50	100
		EB	108	424	25	557	108	399	30	537	0	-25	5	-20	-4%	EB	4	5	4	A	A	A	5	A			EB				57	155			
Unsignalized	3: 69th Street & Southdale SE	NB	36	18	36	90	37	19	39	95	1	1	3	5	6%	NB	3	2	2	A	A	A	2	A			NB				19	70			
		WB	75	316	125	516	71	317	128	516	-4	1	3	0	0%	WB	7	8	7	A	A	A	8	A	6	A	WB				72	163			
		SB	53	5	50	108	50	6	56	112	-3	1	6	4	4%	SB	2	1	2	A	A	A	2	A			SB				20	60			
		EB	108	354	60	522	101	333	62	496	-7	-21	2	-26	-5%	EB	5	6	5	A	A	A	6	A			EB				34	142			
Unsignalized	4: 69th Street & Park & Ride Slip Ramp	NB	0	0	0	0	0	0	0	0	0	0	0	0	0%	NB	0	0	0	A	A	A	0	A			NB								
		WB	0	506	5	511	0	508	6	514	0	2	1	3	1%	WB	0	4	4	A	A	A	4	A	4	A	WB				27	112			
		SB	0	0	10	10	0	0	11	11	0	0	1	1	10%	SB	0	0	7	A	A	A	7	A			SB						3	23	
		EB	0	442	0	442	0	423	0	423	0	-19	0	-19	-4%	EB	0	3	0	A	A	A	3	A			EB				27	155			
Signalized	5: 69th Street & York Avenue	NB	185	1030	40	1255	185	1031	44	1260	0	1	4	5	0%	NB	97	22	19	E	C	B	33	C			NB	100	150	100	315	611			
		WB	45	140	40	225	45	141	39	225	0	1	-1	0	0%	WB	66	116	92	E	E	E	102	E	38	D	WB	50	149	100	121	228			
		SB	50	830	185	1065	48	831	187	1066	-2	1	2	1	0%	SB	64	15	6	E	B	A	16	B			SB	48	104	120	108	340	14	148	100
		EB	160	111	150	441	173	114	137	424	-7	3	13	-17	-4%	EB	61	97	31	E	E	C	61	E			EB	140	199	150	114	238			
Unsignalized	6: Mall Circulation Rd & Southdale SE	NB	173	63	15	251	175	60	12	247	2	-3	-3	-4	-2%	NB	1	0	0	A	A	A	1	A			NB				6	29			
		WB	20	136	55	211	19	128	59	206	-1	-8	4	-5	-2%	WB	7	7	4	A	A	A	6	A	3	A	WB				37	82			
		SB	0	0	0	0	0	0	0	0	0	0	0	0	0%	SB	0	0	0	A	A	A	0	A			SB								
		EB	0	35	88	123	0	33	94	127	0	-2	6	4	3%	EB	0	8	3	A	A	A	4	A			EB				38	74			
Unsignalized	7: Mall Circulation Rd & Park & Ride	NB	10	0	25	35	11	0	27	38	1	0	2	3	9%	NB	3	0	2	A	A	A	2	A			NB	24	65						
		WB	35	266	5	306	31	267	5	303	-4	1	0	-3	-1%	WB	2	1	0	A	A	A	1	A	2	A	WB				1	18			
		SB	20	0	55	75	20	0	53	73	0	0	-2	-2	-3%	SB	5	0	3	A	A	A	4	A			SB	30	55						
		EB	0	35	15	50	0	32	13	45	0	-3	-2	-5	-10%	EB	0	2	1	A	A	A	2	A			EB								
Signalized	8: Southdale East Exit & York Avenue	NB	70	1124	55	1249	70	1109	54	1233	0	-15	-1	-16	-1%	NB	60	40	33	E	D	C	41	D			NB	77	304	300	272	463			
		WB	135	15	135	285	137	16	138	291	2	1	3	6	2%	WB	87	138	19	E	F	B	58	E	50	D	WB	65	170	150	110	265	76	150	100
		SB	150	765	105	1020	141	763	106	1010	-9	-2	1	-10	-1%	SB	95	38	36	E	D	D	46	D			SB	147	283	200	273	507			
		EB	175	21	165	361	176	26	177	378	0	5	12	17	5%	EB	52	53	11	D	D	B	33	C			EB				126	139	56	137	
Unsignalized	9: Southdale East Entrance & York Avenue	NB	40	1346	0	1386	39	1322	0	1361	-1	-24	0	-25	-2%	NB	10	4	0	B	A	A	4	A			NB	17	58	300					
		WB	0	0	5	5	0	0	6	6	0	0	1	1	20%	WB	0	0	10	A	A	B	10	B	5	A	WB						5	30	
		SB	0	1048	85	1133	0	1036	83	1119	0	-12	-2	-14	-1%	SB	0	5	5	A	A	A	5	A			SB				2	20		4	175
		EB	0	0	0	0	0	0	0	0	0	0	0	0	0%	EB	0	0	0	A	A	A	0	A			EB								
Unsignalized	10: Southdale East Exit & Mall Circulation Rd	NB	0	25	55	80	0	25	54	79	0	0	-1	-1	-1%	NB	0	1	13	A	A	B	9	A			NB						32	100	
		WB	190	1	0	191	188	0	0	188	-2	-1	0	-3	-2%	WB	0	0	0	A	A	A	0	A	16	C	WB		3						
		SB	300	115	0	415	319	115	0	434	19	0	0	19	5%	SB	30	8	0	D	A	A	24	C			SB	137	276	250	68	292			
		EB	0	0	0	0	0	0	0	0	0	0	0	0	0%	EB	0	0	0	A	A	A	0	A			EB								
Signalized	11: 66th Street & York Avenue	NB	265	615	310	1190	258	608	310	1176	-7	-7	0	-14	-1%	NB	48	27	4	D	C	A	26	C			NB	84	204	200	242	483	26	274	
		WB	370	660	65	1315	368	672	92	1332	-2	12	7	17	1%	WB	64	40	5	E	D	A	44	D	43	D	WB	155	299	300	306	488	25	280	300
		SB	80	510	120	710	78	502	115	695	-2	-8	-5	-15	-2%	SB	78	43	10	E	D	B	41	D			SB	70	179	150	172	339	41	115	75
		EB	195	750	225	1170	178	733	230	1141	-17	-17	5	-29	-2%	EB	68	55	8	E	E	A	46	D			EB	76	223	300	315	603	52	350	300

SimTraffic Simulation Summary
7/27/2012
Existing 2012 Saturday Peak
Measures of Effectiveness

Control	Intersection Location	Appr	Forecast Volumes L	T	R	Total	Modeled Volumes L	T	R	Total	Error Volumes L	T	R	Volume Error by Approach Total	%	Appr	Total Delay by Movement (Sec/Veh) L	T	R	Level of Service by Movement L	T	R	LOS by Approach (Sec/Veh) Delay	LOS	LOS by Intersection (Sec/Veh) Delay	LOS	Appr	Average & Maximum Traffic Queueing (feet) Left-Turn Ave Queue	Max Queue	Storage	Through Ave Queue	Max Queue	Right-Turn Ave Queue	Max Queue	Storage
Signalized	1: 69th Street & France Avenue	NB	85	1206	282	1573	76	1209	275	1560	-9	3	-7	-13	-1%	NB	59	22	5	E	C	A	21	C	26	C	NB	60	158	250	160	269	25	270	220
		WB	169	125	140	434	162	128	136	426	13	3	4	12	3%	WB	49	80	3	D	E	A	44	D			WB	145	265	250	67	170	9	184	100
		SB	129	566	49	743	125	569	50	744	4	4	1	1	0%	SB	55	16	3	E	B	A	22	C			SB	58	232	200	72	138	8	118	100
		EB	33	152	151	336	35	149	147	331	2	-3	4	-5	-1%	EB	48	71	8	D	E	A	41	D			EB	30	94	150	69	151			
Unsignalized	2: 69th Street & Southdale SW	NB	35	8	59	102	32	7	56	95	-3	-1	-3	-7	-7%	NB	22	29	11	C	D	B	16	C	7	A	NB				30	63	33	61	50
		WB	77	191	79	347	72	198	82	352	-5	7	3	5	1%	WB	7	1	1	A	A	A	2	A			WB	21	62	150		4			
		SB	108	27	209	344	108	29	217	354	0	2	8	10	3%	SB	29	34	9	D	D	A	17	C			SB				77	206	56	129	150
		EB	0	531	32	563	0	526	27	553	0	-5	-5	-10	-2%	EB	0	3	3	A	A	A	3	A			EB					2			
Unsignalized	3: 69th Street & Southdale SE	NB	0	0	98	98	0	0	96	96	0	0	-2	-2	-2%	NB	0	0	4	A	A	A	4	A	3	A	NB						39	77	
		WB	95	310	50	455	97	313	51	461	2	3	1	6	1%	WB	4	1	0	A	A	A	2	A			WB	3	22	100					
		SB	0	0	36	36	0	0	39	39	0	0	3	3	8%	SB	0	0	4	A	A	A	4	A			SB						24	58	
		EB	291	359	48	698	287	350	53	690	-4	-9	5	-8	-1%	EB	6	1	1	A	A	A	3	A			EB	21	133	155					
Unsignalized	4: 69th Street & Park & Ride Slip Ramp	NB	0	0	0	0	0	0	0	0	0	0	0	0	0%	NB	0	0	0	A	A	A	0	A	2	A	NB								
		WB	0	455	31	486	0	482	32	494	0	7	1	8	2%	WB	0	2	2	A	A	A	2	A			WB				2	67			
		SB	0	0	0	0	0	0	0	0	0	0	0	0	0%	SB	0	0	0	A	A	A	0	A			SB								
		EB	0	457	0	457	0	443	0	443	0	-14	0	-14	-3%	EB	0	1	0	A	A	A	1	A			EB				9	102			
Signalized	5: 69th Street & York Avenue	NB	158	625	22	1005	165	614	21	1000	7	-11	-1	-5	0%	NB	61	13	12	E	B	B	21	C	29	C	NB	100	160	100	160	384			
		WB	51	81	70	202	49	81	73	203	-2	0	3	1	0%	WB	52	133	70	D	E	E	91	E			WB	54	141	100	102	208			
		SB	29	688	247	964	29	681	249	959	0	-7	2	-5	-1%	SB	62	13	5	E	B	A	12	B			SB	32	104	120	66	215	15	148	100
		EB	217	78	162	457	193	77	171	441	-24	-1	9	-16	-4%	EB	53	124	24	D	E	C	54	D			EB	150	199	150	110	237			
Unsignalized	6: Mall Circulation Rd & Southdale SE	NB	341	0	0	341	336	0	0	336	-5	0	0	-5	-1%	NB	1	0	0	A	A	A	1	A	2	A	NB				3	34			
		WB	0	112	50	162	0	114	49	163	0	2	-1	1	1%	WB	0	7	3	A	A	A	6	A			WB				28	55			
		SB	0	0	0	0	0	0	0	0	0	0	0	0	0%	SB	0	0	0	A	A	A	0	A			SB								
		EB	0	0	36	36	0	0	39	39	0	0	3	3	8%	EB	0	0	0	A	A	A	0	A			EB								
Unsignalized	7: Mall Circulation Rd & Park & Ride	NB	17	21	0	38	17	25	0	42	0	4	0	4	11%	NB	3	4	0	A	A	A	4	A	1	A	NB				23	50			
		WB	0	145	4	149	0	147	4	151	0	2	0	2	1%	WB	0	0	0	A	A	A	0	A			WB								
		SB	0	0	0	0	0	0	0	0	0	0	0	0	0%	SB	0	0	0	A	A	A	0	A			SB								
		EB	0	0	0	0	0	0	0	0	0	0	0	0	0%	EB	0	0	0	A	A	A	0	A			EB								
Signalized	8: Southdale East Exit & York Avenue	NB	0	1056	56	1112	0	1024	55	1079	0	-32	-1	-33	-3%	NB	0	22	13	A	C	B	22	C	19	B	NB				165	297			
		WB	157	0	162	319	153	0	169	322	-4	0	7	3	1%	WB	52	0	6	D	A	A	28	C			WB	50	149	50			22	142	100
		SB	153	703	0	856	150	697	0	847	-3	-6	0	-9	-1%	SB	47	5	0	D	A	A	12	B			SB	100	206	200	51	161			
		EB	99	19	103	221	94	20	107	221	-5	1	4	0	0%	EB	46	52	0	D	D	A	24	C			EB	43	93		21	66			
Unsignalized	9: Southdale East Entrance & York Avenue	NB	106	1147	4	1257	107	1126	2	1235	1	-21	-2	-22	-2%	NB	7	3	4	A	A	A	3	A	4	A	NB	24	73	300					
		WB	0	0	8	8	0	0	7	7	0	0	-1	-1	-13%	WB	0	0	4	A	A	A	4	A			WB						6	31	
		SB	0	883	155	1038	0	874	147	1021	0	-9	-8	-17	-2%	SB	0	4	4	A	A	A	4	A			SB				4	121	1	9	175
		EB	0	0	0	0	0	0	0	0	0	0	0	0	0%	EB	0	0	0	A	A	A	0	A			EB								
Unsignalized	10: Southdale East Exit & Mall Circulation Rd	NB	0	0	0	0	0	0	0	0	0	0	0	0	0%	NB	0	0	0	A	A	A	0	A	1	A	NB								
		WB	0	0	0	0	0	0	0	0	0	0	0	0	0%	WB	0	0	0	A	A	A	0	A			WB								
		SB	221	104	0	325	221	105	0	326	0	1	0	1	0%	SB	2	0	0	A	A	A	1	A			SB								
		EB	0	0	0	0	0	0	0	0	0	0	0	0	0%	EB	0	0	0	A	A	A	0	A			EB								
Signalized	11: 66th Street & York Avenue	NB	220	649	316	1185	217	641	302	1160	-3	-8	-14	-25	-2%	NB	46	17	3	D	B	A	19	B	27	C	NB	67	142	200	128	237			
		WB	306	286	25	617	293	292	28	613	-13	6	3	-4	-1%	WB	51	26	1	D	C	A	37	D			WB	97	184	300	76	164			
		SB	46	542	75	663	42	546	73	661	-4	4	-2	-2	0%	SB	55	34	8	E	C	A	32	C			SB	33	179	150	103	303	32	128	75
		EB	102	280	163	545	104	266	157	547	2	6	-6	2	0%	EB	56	32	3	E	C	A	20	C			EB	33	82	300	81	144			

A143

SimTraffic Simulation Summary
8/17/2012
2014 SAT NO BUILD
Measures of Effectiveness

Control	Intersection Location	Appr	Forecast Volumes L	T	R	Total	Modeled Volumes L	T	R	Total	Error Volumes L	T	R	Volume Error by Approach Total	%
Signalized	1: 69th Street & France Avenue	NB	90	1300	285	1675	89	1312	275	1676	-1	12	-10	1	0%
		WB	170	166	140	506	171	199	137	507	1	3	-3	1	0%
		SB	130	645	50	825	130	638	51	817	0	-9	1	-8	-1%
		EB	35	185	155	375	35	186	154	375	0	1	-1	0	0%
Unsignalized	2: 69th Street & Southdale SW	NB	35	10	60	105	31	10	62	103	-4	0	2	-2	-2%
		WB	80	216	135	431	74	220	137	431	-6	4	2	0	0%
		SB	125	30	250	405	127	30	250	407	2	0	0	2	0%
		EB	0	573	35	608	0	568	34	602	0	-5	-1	-6	-1%
Unsignalized	3: 69th Street & Southdale SE	NB	0	0	100	100	0	0	93	93	0	0	-7	-7	-7%
		WB	95	371	80	546	87	375	83	545	-8	4	3	-1	0%
		SB	0	5	60	65	0	5	58	63	0	0	-2	-2	-3%
		EB	320	380	50	750	316	386	43	747	-2	6	-7	-3	0%
Unsignalized	4: 69th Street & Park & Ride Slip Ramp	NB	0	0	0	0	0	0	0	0	0	0	0	0	0%
		WB	0	548	35	581	0	547	39	586	0	1	4	5	1%
		SB	0	0	0	0	0	0	0	0	0	0	0	0	0%
		EB	0	480	0	480	0	478	0	478	0	-2	0	-2	0%
Signalized	6: 69th Street & York Avenue	NB	175	860	25	1060	180	892	27	1099	5	2	2	9	1%
		WB	55	140	70	265	48	140	68	256	-7	0	-2	-9	-3%
		SB	30	751	265	1046	26	767	261	1054	-4	16	-4	8	1%
		EB	220	96	165	481	219	95	164	478	-1	-1	-1	-3	-1%
Unsignalized	6: Mall Circulation Rd & Southdale SE	NB	395	5	0	400	395	5	0	400	0	0	0	0	0%
		WB	15	115	50	180	14	112	52	178	-1	-3	2	-2	-1%
		SB	0	0	0	0	0	0	0	0	0	0	0	0	0%
		EB	0	0	50	50	0	0	49	49	0	0	-1	-1	-2%
Unsignalized	7: Mall Circulation Rd & Park & Ride	NB	20	25	0	45	19	26	0	45	-1	1	0	0	0%
		WB	0	160	5	165	0	159	6	165	0	-1	1	0	0%
		SB	0	0	0	0	0	0	0	0	0	0	0	0	0%
		EB	0	0	0	0	0	0	0	0	0	0	0	0	0%
Signalized	8: Southdale East Exit & York Avenue	NB	0	1120	60	1180	0	1113	60	1173	0	-7	0	-7	-1%
		WB	160	0	165	325	166	0	161	327	6	0	-4	2	1%
		SB	155	730	0	885	151	722	0	873	-4	-8	0	-12	-1%
		EB	150	20	155	325	155	21	166	342	5	1	11	17	5%
Unsignalized	9: Southdale East Entrance & York Avenue	NB	160	1210	5	1375	157	1204	7	1368	-3	-6	2	-7	-1%
		WB	0	0	10	10	0	0	0	0	0	0	-1	-1	-10%
		SB	0	916	210	1126	0	904	211	1115	0	-12	1	-11	-1%
		EB	0	0	0	0	0	0	0	0	0	0	0	0	0%
Unsignalized	10: Southdale East Exit & Mall Circulation Rd	NB	0	0	0	0	0	0	0	0	0	0	0	0	0%
		WB	0	0	0	0	0	0	0	0	0	0	0	0	0%
		SB	320	105	0	425	336	105	0	441	16	0	0	16	4%
		EB	0	0	0	0	0	0	0	0	0	0	0	0	0%
Signalized	11: 66th Street & York Avenue	NB	225	710	320	1255	228	704	316	1248	3	-6	-4	-7	-1%
		WB	310	330	30	670	302	329	32	663	-8	-1	2	-7	-1%
		SB	50	620	80	750	44	610	85	739	-6	-10	5	-11	-1%
		EB	105	320	185	610	109	329	174	612	4	9	9	22	4%

Appr	Total Delay by Movement (Sec/Veh) L	T	R	Level of Service by Movement L	T	R	LOS by Approach (Sec/Veh) Delay	LOS	LOS by Intersection (Sec/Veh) Delay	LOS
NB	59	25	6	E	C	A	24	C		
WB	56	62	4	E	E	A	44	D	29	C
SB	61	18	4	E	B	A	24	C		
EB	68	66	8	E	E	A	42	D		
NB	26	39	13	D	E	B	19	C		
WB	8	1	1	A	A	A	2	A	10	B
SB	44	62	12	E	E	B	25	C		
EB	0	3	3	A	A	A	3	A		
NB	0	0	5	A	A	A	5	A		
WB	4	1	0	A	A	A	1	A	3	A
SB	0	0	4	A	A	A	4	A		
EB	8	1	1	A	A	A	4	A		
NB	0	0	0	A	A	A	0	A		
WB	0	2	2	A	A	A	2	A	2	A
SB	0	0	0	A	A	A	0	A		
EB	0	3	0	A	A	A	3	A		
NB	92	22	14	E	C	B	33	C		
WB	61	112	84	E	F	E	95	E	38	D
SB	71	18	7	E	B	A	17	B		
EB	61	110	33	E	F	C	63	E		
NB	1	1	0	A	A	A	1	A		
WB	8	7	3	A	A	A	6	A	2	A
SB	0	0	0	A	A	A	0	A		
EB	0	0	0	A	A	A	0	A		
NB	3	3	0	A	A	A	3	A		
WB	0	0	0	A	A	A	0	A	1	A
SB	0	0	0	A	A	A	0	A		
EB	0	0	0	A	A	A	0	A		
NB	0	22	16	A	C	B	22	C		
WB	58	0	6	E	A	A	32	C	29	C
SB	56	11	0	E	B	A	19	B		
EB	57	54	0	E	D	A	29	C		
NB	11	4	3	B	A	A	5	A		
WB	0	0	6	A	A	A	8	A	5	A
SB	0	4	5	A	A	A	4	A		
EB	0	0	0	A	A	A	0	A		
NB	0	0	0	A	A	A	0	A		
WB	0	0	0	A	A	A	0	A	2	A
SB	2	0	0	A	A	A	2	A		
EB	0	0	0	A	A	A	0	A		
NB	50	19	3	D	B	A	21	C		
WB	56	33	2	E	C	A	42	D	32	C
SB	66	40	12	E	D	B	38	D		
EB	63	43	3	E	D	A	35	D		

Appr	Average & Maximum Traffic Queueing (feet) Left-Turn Ave Queue	Max Queue	Storage	Through Ave Queue	Max Queue	Right-Turn Ave Queue	Max Queue	Storage
NB	60	204	250	197	334	51	278	220
WB	146	277	250	99	231	18	147	100
SB	116	223	200	81	184	20	150	100
EB	37	103	150	69	168			
NB				33	102	32	88	50
WB	20	69	150		11			
SB				112	350	73	189	150
EB				1	13			
NB						39	86	
WB	2	17	100					
SB						29	57	
EB	31	141	155		12			
NB								
WB								
SB								
EB				19	129			
NB	100	169	100	272	599			
WB	49	129	100	129	272			
SB	30	81	120	129	415	40	199	100
EB	150	199	150	127	248			
NB				2	26			
WB				29	54			
SB								
EB								
NB				25	61			
WB								
SB								
EB								
NB				207	391			
WB	50	195	50			33	150	100
SB	117	231	200	135	285			
EB	67	136		22	87			
NB	41	114	300	15	410			
WB						9	31	
SB				4	119	2	22	175
EB								
NB								
WB								
SB		12	250	2	41			
EB								
NB	66	188	200	129	342			
WB	115	216	300	100	223			
SB	40	128	150	203	369	33	123	75
EB	38	66	300	121	211			

SimTraffic Simulation Summary
8/17/2012
2014 SAT BUILD ALT 1
Measures of Effectiveness

Control	Intersection Location	Appr	Forecast Volumes L	T	R	Total	Modeled Volumes L	T	R	Total	Error Volumes L	T	R	Volume Error by Approach Total	%
Signalized	1: 69th Street & France Avenue	NB	90	1300	285	1675	89	1286	292	1667	-1	-14	7	-8	0%
		WB	170	186	140	496	165	184	143	492	-5	-2	3	-4	-1%
		SB	130	645	50	825	130	659	50	839	0	14	0	14	2%
		EB	35	195	155	385	35	198	152	383	0	1	-3	-2	-1%
Unsignalized	2: 69th Street & Southdale SW	NB	35	10	60	105	32	11	57	100	-3	1	-3	-5	-5%
		WB	80	210	135	425	72	217	132	421	-8	7	-3	-4	-1%
		SB	125	30	250	405	121	29	236	386	-4	-1	-12	-17	-4%
		EB	0	583	35	618	0	595	37	632	0	12	2	14	2%
Unsignalized	3: 69th Street & Southdale SE	NB	0	0	100	100	0	0	102	102	0	0	2	2	2%
		WB	95	381	120	596	97	381	123	601	2	0	3	5	1%
		SB	0	6	45	51	0	6	41	47	0	0	-4	-4	-8%
		EB	330	380	50	760	342	373	49	764	12	-7	-1	4	1%
Unsignalized	4: 69th Street & Park & Ride Slip Ramp	NB	0	0	0	0	0	0	0	0	0	0	0	0	0%
		WB	0	586	5	591	0	591	4	595	0	5	-1	4	1%
		SB	0	0	10	10	0	0	8	8	0	0	-2	-2	-20%
		EB	0	480	0	480	0	471	0	471	0	-9	0	-9	-2%
Signalized	5: 69th Street & York Avenue	NB	175	910	25	1110	176	911	29	1116	1	1	4	6	1%
		WB	55	150	70	275	54	157	68	279	-1	7	-2	4	1%
		SB	30	792	265	1087	27	776	267	1070	-3	-16	2	-17	-2%
		EB	220	98	165	481	214	97	161	472	-6	1	-4	-9	-2%
Unsignalized	6: Mall Circulation Rd & Southdale SE	NB	395	40	15	450	404	43	15	462	9	3	0	12	3%
		WB	26	116	60	191	22	114	50	186	-3	-2	0	-5	-3%
		SB	0	0	0	0	0	0	0	0	0	0	0	0	0%
		EB	0	25	25	50	0	26	25	51	0	1	0	1	2%
Unsignalized	7: Mall Circulation Rd & Park & Ride	NB	10	0	30	40	9	0	27	36	-1	0	-3	-4	-10%
		WB	40	300	5	345	40	296	4	340	0	-4	-1	-5	-1%
		SB	25	0	20	45	26	0	22	48	1	0	2	3	7%
		EB	0	25	15	40	0	26	14	42	0	3	-1	2	5%
Signalized	8: Southdale East Exit & York Avenue	NB	100	1040	60	1200	98	1032	60	1190	-2	-8	0	-10	-1%
		WB	160	20	150	330	144	20	147	311	-16	0	-3	-19	-6%
		SB	155	730	125	1010	157	733	120	1010	2	3	-5	0	0%
		EB	165	20	195	380	159	18	200	377	-6	-2	5	-3	-1%
Unsignalized	9: Southdale East Entrance & York Avenue	NB	65	1226	5	1296	62	1216	6	1284	-3	-10	1	-12	-1%
		WB	0	0	10	10	0	0	9	9	0	0	-1	-1	-10%
		SB	0	1042	105	1147	0	1033	97	1130	0	-9	-8	-17	-1%
		EB	0	0	0	0	0	0	0	0	0	0	0	0	0%
Unsignalized	10: Southdale East Exit & Mall Circulation Rd	NB	0	25	55	80	0	27	55	82	0	2	0	2	3%
		WB	240	6	0	246	234	6	0	240	-6	0	0	-6	-2%
		SB	320	105	0	425	320	107	0	427	0	2	0	2	0%
		EB	0	0	0	0	0	0	0	0	0	0	0	0	0%
Signalized	11: 66th Street & York Avenue	NB	225	726	320	1271	223	723	314	1260	-2	-3	-6	-11	-1%
		WB	310	330	30	670	304	326	28	658	-6	-2	-2	-10	-1%
		SB	50	640	80	770	50	639	83	772	0	-1	3	2	0%
		EB	105	320	165	590	105	315	164	584	0	-5	-1	-6	-1%

Appr	Total Delay by Movement (Sec/Veh) L	T	R	Level of Service by Movement L	T	R	LOS by Approach (Sec/Veh) Delay	LOS	LOS by Intersection (Sec/Veh) Delay	LOS
NB	81	25	6	E	C	A	24	C		
WB	58	65	3	E	E	A	45	D	29	C
SB	61	18	4	E	B	A	24	C		
EB	65	69	8	E	E	A	44	D		
NB	29	35	13	D	E	B	21	C		
WB	7	2	1	A	A	A	3	A	9	A
SB	41	47	10	E	E	B	22	C		
EB	0	4	3	A	A	A	4	A		
NB	0	5	5	A	A	A	5	A		
WB	4	1	0	A	A	A	1	A	4	A
SB	0	1	5	A	A	A	4	A		
EB	11	2	1	B	A	A	6	A		
NB	0	0	0	A	A	A	0	A		
WB	0	2	1	A	A	A	2	A	2	A
SB	0	0	2	A	A	A	2	A		
EB	0	2	0	A	A	A	2	A		
NB	85	20	15	E	C	B	30	C		
WB	66	107	75	E	E	E	91	F	38	D
SB	69	16	6	E	B	A	15	B		
EB	63	103	25	E	E	C	58	E		
NB	1	1	0	A	A	A	1	A		
WB	11	10	5	B	B	A	9	A	3	A
SB	0	0	0	A	A	A	0	A		
EB	0	6	3	A	A	A	6	A		
NB	5	0	2	A	A	A	3	A		
WB	2	1	0	A	A	A	1	A	2	A
SB	5	0	4	A	A	A	5	A		
EB	0	2	1	A	A	A	2	A		
NB	63	42	32	E	D	C	43	D		
WB	95	141	19	E	E	B	62	E	49	D
SB	113	46	52	E	D	D	57	E		
EB	57	50	10	E	D	B	32	C		
NB	12	3	2	B	A	A	3	A		
WB	0	0	9	A	A	A	9	A	5	A
SB	0	7	6	A	A	A	7	A		
EB	0	0	0	A	A	A	0	A		
NB	0	0	10	A	A	B	7	A		
WB	1	0	0	A	A	A	1	A	13	B
SB	26	9	0	D	A	A	22	C		
EB	0	0	0	A	A	A	0	A		
NB	46	18	3	D	B	A	19	B		
WB	59	34	2	E	C	A	42	D	32	C
SB	69	40	11	E	D	B	39	D		
EB	63	44	3	E	D	A	36	D		

Appr	Average & Maximum Traffic Queueing (feet) Left-Turn Ave Queue	Max Queue	Storage	Through Ave Queue	Max Queue	Right-Turn Ave Queue	Max Queue	Storage
NB	79	212	250	194	332	42	370	220
WB	141	268	250	68	187	23	160	100
SB	115	215	200	66	177	16	150	100
EB	36	123	150	94	186			
NB				35	95	34	96	50
WB	17	49	150	1	14			
SB				99	240	68	198	150
EB				3	68			
NB						36	68	
WB	3	35	100		2			
SB						25	51	
EB	46	169	155	1	22			
NB								
WB								
SB						2	23	
EB				15	114			
NB	100	150	100	250	522			
WB	53	138	100	136	281			
SB	32	88	120	106	316	21	148	100
EB	150	169	150	113	242			
NB				12	48		4	50
WB				43	101			
SB								
EB				26	67			
NB	24	50						
WB				2	37			
SB	26	61						
EB								
NB	103	315	300	200	383			
WB	80	160	100	144	359	79	156	100
SB	167	269	200	320	567			
EB				121	140	61	127	
NB	21	70	300		9			
WB						9	30	
SB				21	206		4	175
EB								
NB						31	74	
WB	1	10						
SB	118	246	250	69	199			
EB								
NB	57	143	200	117	331	1	20	
WB	112	218	300	104	207	2	68	300
SB	41	169	150	207	387	28	113	75
EB	36	93	300	116	207			

A145

SimTraffic Simulation Summary
8/19/2012
2014 SAT BUILD ALT 2
Measures of Effectiveness

Control	Intersection Location	Appr	Forecast Volumes L	T	R	Total	Modeled Volumes L	T	R	Total	Error Volumes L	T	R	Volume Error by Approach Total	%
Signalized	1: 69th Street & France Avenue	NB	90	1300	285	1675	80	1282	292	1654	-10	-18	7	-21	-1%
		WB	170	228	140	538	168	222	143	533	-2	-6	3	-5	-1%
		SB	130	645	59	825	130	658	52	840	0	13	2	15	2%
		EB	35	195	155	385	34	194	157	385	-1	-1	2	0	0%
Unsignalized	2: 69th Street & Southdale SW	NB	35	10	60	105	30	11	60	101	-5	1	0	-4	-4%
		WB	80	250	135	465	85	248	126	456	5	-2	-9	-6	-1%
		SB	63	30	250	343	59	32	251	342	-4	2	1	-1	0%
		EB	165	418	35	618	160	424	37	621	-5	6	2	3	0%
Unsignalized	3: 69th Street & Southdale SE	NB	40	20	40	100	39	22	43	104	-1	2	3	4	4%
		WB	95	381	120	596	92	378	124	594	-3	-3	4	-2	0%
		SB	63	6	45	114	60	4	44	108	-3	-2	-1	-6	-5%
		EB	165	318	50	533	165	323	46	534	0	5	-4	1	0%
Unsignalized	4: 69th Street & Park & Ride Slip Ramp	NB	0	0	0	0	0	0	0	0	0	0	0	0	0%
		WB	0	586	5	591	0	588	4	590	0	0	-1	-1	0%
		SB	0	0	10	10	0	0	10	10	0	0	0	0	0%
		EB	0	420	0	420	0	424	0	424	0	4	0	4	1%
Signalized	5: 69th Street & York Avenue	NB	175	910	25	1110	178	921	26	1123	1	11	1	13	1%
		WB	55	150	70	275	52	150	64	266	-3	0	-6	-9	-3%
		SB	30	782	265	1087	27	786	259	1072	-3	4	-6	-5	0%
		EB	220	36	165	421	224	37	163	424	4	1	-2	3	1%
Unsignalized	6: Mall Circulation Rd & Southdale SE	NB	230	61	15	306	233	64	15	312	3	3	0	6	2%
		WB	25	116	50	191	23	119	49	191	-2	3	-1	0	0%
		SB	0	0	0	0	0	0	0	0	0	0	0	0	0%
		EB	0	25	88	113	0	22	85	107	0	-3	-3	-6	-5%
Unsignalized	7: Mall Circulation Rd & Park & Ride	NB	10	0	30	40	9	0	30	39	-1	0	0	-1	-3%
		WB	40	300	5	345	36	297	4	337	-4	-3	-1	-8	-2%
		SB	25	0	20	45	23	0	19	42	-2	0	-1	-3	-7%
		EB	0	25	15	40	0	22	15	37	0	-3	0	-3	-8%
Signalized	8: Southdale East Exit & York Avenue	NB	100	1040	60	1200	100	1052	53	1205	0	12	-7	5	0%
		WB	160	20	150	330	167	18	149	332	7	-4	-1	2	1%
		SB	155	730	125	1010	155	728	131	1014	0	-2	6	4	0%
		EB	165	20	195	380	163	21	196	380	-2	1	1	0	0%
Unsignalized	9: Southdale East Entrance & York Avenue	NB	55	1226	5	1296	63	1221	6	1290	-2	-5	1	-6	0%
		WB	0	0	10	10	0	0	12	12	0	0	2	2	20%
		SB	0	1042	105	1147	0	1049	109	1158	0	7	-4	11	1%
		EB	0	0	0	0	0	0	0	0	0	0	0	0	0%
Unsignalized	10: Southdale East Exit & Mall Circulation Rd	NB	0	25	55	80	0	25	49	74	0	0	-6	-6	-8%
		WB	240	6	0	246	242	6	0	248	2	0	0	2	1%
		SB	320	105	0	425	324	97	0	421	4	-8	0	-4	-1%
		EB	0	0	0	0	0	0	0	0	0	0	0	0	0%
Signalized	11: 66th Street & York Avenue	NB	225	726	320	1271	221	716	331	1268	-4	-10	11	-3	0%
		WB	310	330	30	670	313	340	30	683	3	10	0	13	2%
		SB	50	940	80	770	52	944	79	775	2	4	-1	5	1%
		EB	105	320	165	590	103	335	162	600	-2	15	-3	10	2%

Appr	Total Delay by Movement (Sec/Veh) L	T	R	Level of Service by Movement L	T	R	LOS by Approach (Sec/Veh) Delay	LOS	LOS by Intersection (Sec/Veh) Delay	LOS
NB	35	37	9	D	D	A	32	C	35	D
WB	35	50	3	D	D	A	33	C		
SB	39	47	14	D	D	B	44	D		
EB	35	49	7	D	D	A	31	C		
NB	2	2	2	A	A	A	2	A	6	A
WB	5	6	5	A	A	A	6	A		
SB	4	4	5	A	A	A	5	A		
EB	6	7	6	A	A	A	7	A		
NB	2	2	2	A	A	A	2	A	7	A
WB	9	10	9	A	B	A	10	A		
SB	2	2	2	A	A	A	2	A		
EB	5	6	5	A	A	A	6	A		
NB	0	0	0	A	A	A	0	A	4	A
WB	0	6	4	A	A	A	6	A		
SB	0	0	16	A	A	C	16	C		
EB	0	2	0	A	A	A	2	A		
NB	88	20	18	E	C	B	31	C	33	C
WB	57	103	74	E	E	E	87	E		
SB	79	14	6	E	B	A	14	B		
EB	57	167	21	E	E	C	53	D		
NB	1	0	0	A	A	A	1	A	3	A
WB	6	8	4	A	A	A	7	A		
SB	0	0	0	A	A	A	0	A		
EB	0	9	3	A	A	A	4	A		
NB	4	0	2	A	A	A	2	A	2	A
WB	2	1	0	A	A	A	1	A		
SB	5	0	3	A	A	A	4	A		
EB	0	2	1	A	A	A	2	A		
NB	82	43	34	E	D	C	46	D	47	D
WB	60	96	17	F	F	B	52	D		
SB	107	44	50	F	D	D	84	D		
EB	51	52	9	D	D	A	29	C		
NB	13	3	3	B	A	A	3	A	4	A
WB	0	0	9	A	A	A	9	A		
SB	0	5	6	A	A	A	6	A		
EB	0	0	0	A	A	A	0	A		
NB	0	1	7	A	A	A	5	A	10	B
WB	0	0	0	A	A	A	0	A		
SB	20	8	0	C	A	A	17	C		
EB	0	0	0	A	A	A	0	A		
NB	41	20	3	D	C	A	19	B	32	C
WB	58	35	2	E	D	A	44	D		
SB	67	36	13	E	D	B	37	D		
EB	65	44	3	E	D	A	37	D		

Appr	Average & Maximum Traffic Queueing (feet) Left-Turn Ave Queue	Left-Turn Max Queue	Left-Turn Storage	Through Ave Queue	Through Max Queue	Right-Turn Ave Queue	Right-Turn Max Queue	Right-Turn Storage
NB	53	205	250	331	584	69	270	220
WB	99	203	250	88	181	26	150	100
SB	90	203	200	152	349	17	148	100
EB	34	105	150	82	194			
NB				23	66			
WB				36	108			
SB				20	64	14	63	100
EB				81	150			
NB				23	67			
WB				96	165			
SB				18	57			
EB				42	100			
NB								
WB				35	125			
SB						8	33	
EB				21	148			
NB	100	150	100	254	492			
WB	51	149	100	130	231			
SB	32	111	120	94	376	20	150	100
EB	150	199	150	91	240			
NB				7	36		4	50
WB				44	88			
SB								
EB				37	73			
NB	24	61						
WB				2	26			
SB	25	57						
EB								
NB	99	255	300	233	420			
WB	75	160	150	131	391	81	190	100
SB	165	250	200	327	571			
EB				121	139	59	124	
NB	23	82	300					
WB						10	31	
SB				14	137	1	7	175
EB								
NB						26	64	
WB		10						
SB	113	247	250	46	179			
EB								
NB	64	162	200	181	352	26	274	
WB	125	230	300	110	213			
SB	43	184	150	206	383	32	125	75
EB	37	90	300	117	206			

SimTraffic Simulation Summary
8/19/2012
2030 SAT NO BUILD
Measures of Effectiveness

Control	Intersection Location	Appr	Forecast Volumes L	T	R	Total	Modeled Volumes L	T	R	Total	Error Volumes L	T	R	Volume Error by Approach Total	%	Appr	Total Delay by Movement (Sec/Veh) L	T	R	Level of Service by Movement L	T	R	LOS by Approach (Sec/Veh) Delay	LOS	LOS by Intersection (Sec/Veh) Delay	LOS	Appr	Average & Maximum Traffic Queueing (feet) Left-Turn Ave Queue	Max Queue	Storage	Through Ave Queue	Max Queue	Right-Turn Ave Queue	Max Queue	Storage
Signalized	1: 69th Street & France Avenue	NB	95	1410	285	1790	96	1370	286	1752	1	-40	1	-38	-2%	NB	66	24	6	E	C	A	23	C	30	C	NB	88	240	250	204	360	63	270	220
		WB	170	193	140	503	164	198	140	502	-6	5	0	-1	0%	WB	58	62	4	E	E	A	45	D			WB	141	210	250	96	203	27	148	100
		SB	130	695	55	880	126	696	58	880	-4	1	3	0	0%	SB	80	17	4	E	B	A	22	C			SB	111	203	200	88	188	14	150	100
		EB	40	185	170	395	38	186	176	400	-2	1	6	5	1%	EB	65	72	9	E	E	A	44	D			EB	40	124	150	94	203			
Unsignalized	2: 69th Street & Southdale SW	NB	35	10	60	105	26	11	64	103	-7	1	4	-2	-2%	NB	22	42	13	C	E	B	19	C	10	B	NB				32	104	38	96	50
		WB	80	216	135	431	83	210	139	441	3	3	4	10	2%	WB	9	1	1	A	A	A	3	A			WB	26	80	150	1	7			
		SB	125	30	250	405	127	30	257	414	2	0	7	9	2%	SB	47	55	12	E	E	B	26	D			SB				117	428	79	200	150
		EB	0	573	35	608	0	578	31	609	0	5	-4	1	0%	EB	0	3	3	A	A	A	3	A			EB				4	83			
Unsignalized	3: 69th Street & Southdale SE	NB	0	0	100	100	0	0	98	98	0	0	-2	-2	-2%	NB	0	0	7	A	A	A	7	A	3	A	NB						39	98	
		WB	95	370	80	545	90	384	85	559	-5	14	5	14	3%	WB	4	1	0	A	A	A	1	A			WB	2	10	100					
		SB	0	5	60	65	0	5	56	61	0	0	-4	-4	-6%	SB	0	0	4	A	A	A	4	A			SB						31	69	
		EB	320	380	50	750	318	391	53	762	-2	11	3	12	2%	EB	8	2	1	A	A	A	4	A			EB	31	141	155	3	67			
Unsignalized	4: 69th Street & Park & Ride Slip Ramp	NB	0	0	0	0	0	0	0	0	0	0	0	0	0%	NB	0	0	0	A	A	A	0	A	2	A	NB								
		WB	0	541	35	576	0	598	37	635	0	17	2	19	3%	WB	0	2	2	A	A	A	2	A			WB								
		SB	0	0	0	0	0	0	0	0	0	0	0	0	0%	SB	0	0	0	A	A	A	0	A			SB								
		EB	0	485	0	485	0	492	0	492	0	7	0	7	1%	EB	0	3	0	A	A	A	3	A			EB				15	135			
Signalized	5: 69th Street & York Avenue	NB	175	965	25	1165	170	963	29	1171	4	-2	4	6	1%	NB	89	21	15	F	C	B	31	C	40	D	NB	100	150	100	272	541			
		WB	65	135	70	260	53	138	68	259	-2	3	-2	-1	0%	WB	64	100	68	E	F	E	84	F			WB	54	138	100	121	254			
		SB	30	846	265	1141	31	846	274	1151	1	0	9	10	1%	SB	77	17	8	E	B	A	16	B			SB	34	134	120	130	362	36	150	100
		EB	220	100	165	485	217	100	173	490	-3	0	8	5	1%	EB	63	99	31	E	F	C	59	E			EB	150	196	150	118	243			
Unsignalized	6: Mall Circulation Rd & Southdale SE	NB	395	5	0	400	397	5	0	402	2	0	0	2	1%	NB	1	0	0	A	A	A	1	A	2	A	NB				3	30			
		WB	15	115	50	180	13	113	55	181	-2	-2	5	1	1%	WB	7	7	3	A	A	A	6	A			WB				30	63			
		SB	0	0	0	0	0	0	0	0	0	0	0	0	0%	SB	0	0	0	A	A	A	0	A			SB								
		EB	0	0	50	50	0	0	48	48	0	0	-2	-2	-4%	EB	0	0	0	A	A	A	0	A			EB								
Unsignalized	7: Mall Circulation Rd & Park & Ride	NB	20	25	0	45	20	22	0	42	0	-3	0	-3	-7%	NB	3	3	0	A	A	A	3	A	1	A	NB				25	54			
		WB	0	160	5	165	0	161	5	166	0	1	0	1	1%	WB	0	0	0	A	A	A	0	A			WB								
		SB	0	0	0	0	0	0	0	0	0	0	0	0	0%	SB	0	0	0	A	A	A	0	A			SB								
		EB	0	0	0	0	0	0	0	0	0	0	0	0	0%	EB	0	0	0	A	A	A	0	A			EB								
Signalized	8: Southdale East Exit & York Avenue	NB	0	1199	60	1259	0	1165	59	1244	0	-10	-1	-11	-1%	NB	0	21	14	A	C	B	21	C	30	C	NB				209	382			
		WB	160	0	165	325	158	0	155	313	-2	0	-10	-12	-4%	WB	65	0	6	E	A	A	36	D			WB	50	101	50			28	150	100
		SB	155	826	0	981	147	844	0	991	-8	18	0	10	1%	SB	62	11	0	E	B	A	19	B			SB	125	227	200	154	316			
		EB	150	20	155	325	148	21	151	320	-2	1	-4	-5	-2%	EB	56	53	1	E	D	A	30	C			EB	66	132		22	111			
Unsignalized	9: Southdale East Entrance & York Avenue	NB	160	1285	5	1450	151	1271	6	1428	-9	-14	1	-22	-2%	NB	13	4	3	B	A	A	5	A	5	A	NB	41	121	300	5	137			
		WB	0	0	10	10	0	0	9	9	0	0	-1	-1	-10%	WB	0	0	6	A	A	A	6	A			WB						8	31	
		SB	0	1014	210	1224	0	1022	208	1230	0	8	-2	6	0%	SB	0	4	6	A	A	A	4	A			SB						2	19	175
		EB	0	0	0	0	0	0	0	0	0	0	0	0	0%	EB	0	0	0	A	A	A	0	A			EB								
Unsignalized	10: Southdale East Exit & Mall Circulation Rd	NB	0	0	0	0	0	0	0	0	0	0	0	0	0%	NB	0	0	0	A	A	A	0	A	2	A	NB								
		WB	0	0	0	0	0	0	0	0	0	0	0	0	0%	WB	0	0	0	A	A	A	0	A			WB								
		SB	325	105	0	430	318	109	0	428	-6	4	0	-2	0%	SB	2	0	0	A	A	A	1	A			SB		6	250	4	76			
		EB	0	0	0	0	0	0	0	0	0	0	0	0	0%	EB	0	0	0	A	A	A	0	A			EB								
Signalized	11: 66th Street & York Avenue	NB	240	751	345	1336	244	747	334	1325	4	-4	-11	-11	-1%	NB	54	19	3	D	B	A	21	C	33	C	NB	73	183	200	155	344	1	33	
		WB	340	355	30	725	345	352	26	723	5	-3	-4	-2	0%	WB	57	34	2	E	C	A	44	D			WB	130	230	300	108	195			
		SB	55	675	85	815	59	670	90	815	0	-5	5	0	0%	SB	71	41	16	E	D	B	40	D			SB	48	157	150	228	430	36	125	75
		EB	115	350	180	645	116	350	189	654	0	0	0	0	1%	EB	62	45	3	E	D	A	36	D			EB	43	92	300	132	227			

SimTraffic Simulation Summary
8/19/2012
2030 SAT BUILD ALT 1
Measures of Effectiveness

Intersection			Forecast Volumes				Modeled Volumes				Error Volumes				Volume Error by Approach		Appr	Total Delay by Movement (Sec/Veh)			Level of Service by Movement			LOS by Approach (Sec/Veh)		LOS by Intersection (Sec/Veh)		Appr	Average & Maximum Traffic Queueing (feet)							
Control	Location	Appr	L	T	R	Total	L	T	R	Total	L	T	R	Total	%			L	T	R	L	T	R	Delay	LOS	Delay	LOS		Left-Turn			Through		Right-Turn		
																													Ave Queue	Max Queue	Storage	Ave Queue	Max Queue	Ave Queue	Max Queue	Storage
Signalized	1: 69th Street & France Avenue	NB	95	1410	285	1790	93	1402	275	1770	-2	-8	-10	-20	-1%	NB	62	24	6	E	C	A	23	C	30	C	NB	84	225	250	207	382	61	270	220
		WB	170	183	140	493	165	185	136	486	-5	2	-4	-7	-1%	WB	59	63	4	E	E	A	45	D			WB	144	247	250	92	263	21	146	100
		SB	130	695	55	880	118	691	61	870	-12	-4	6	-10	-1%	SB	64	18	4	E	B	A	23	C			SB	105	213	200	90	193	21	180	100
		EB	40	195	170	405	39	200	168	407	-1	5	-2	2	0%	EB	66	67	9	E	E	A	43	D			EB	40	119	150	97	209			
Unsignalized	2: 69th Street & Southdale SW	NB	35	10	60	105	31	9	66	99	-4	-1	-1	-6	-6%	NB	24	52	11	C	E	B	19	C	10	B	NB				33	77	34	86	50
		WB	80	210	135	425	73	214	132	419	-7	4	-3	-6	-1%	WB	7	2	1	A	A	A	3	A			WB	18	48	150	1	19			
		SB	125	30	250	405	119	27	244	390	-6	-3	-6	-15	-4%	SB	36	35	10	E	E	B	20	C			SB				89	242	64	166	150
		EB	0	583	35	618	0	554	37	591	0	-29	2	-27	-4%	EB	0	3	3	A	A	A	3	A			EB				1	15			
Unsignalized	3: 69th Street & Southdale SE	NB	0	0	100	100	0	0	97	97	0	0	-3	-3	-3%	NB	0	0	5	A	A	A	5	A	4	A	NB						42	94	
		WB	95	380	120	595	93	375	137	605	-2	-5	17	10	2%	WB	4	1	0	A	A	A	1	A			WB	2	27	100					
		SB	0	6	45	51	0	6	44	50	0	0	-1	-1	-2%	SB	0	1	4	A	A	A	4	A			SB						25	63	
		EB	330	380	50	760	314	364	52	730	-16	-16	2	-30	-4%	EB	10	2	1	B	A	A	5	A			EB	37	159	155	4	92			
Unsignalized	4: 69th Street & Park & Ride Slip Ramp	NB	0	0	0	0	0	0	0	0	0	0	0	0	0%	NB	0	0	0	A	A	A	0	A	2	A	NB								
		WB	0	580	5	585	0	588	5	593	0	8	0	8	1%	WB	0	2	1	A	A	A	2	A			WB					4			
		SB	0	0	10	10	0	0	11	11	0	0	1	1	10%	SB	0	0	1	A	A	A	1	A			SB						3	26	
		EB	0	485	0	485	0	466	0	466	0	-19	0	-19	-4%	EB	0	2	0	A	A	A	2	A			EB				14	116			
Signalized	5: 69th Street & York Avenue	NB	175	985	25	1185	168	962	21	1171	13	-23	-4	-14	-1%	NB	95	22	17	E	C	B	34	C	40	D	NB	100	150	100	299	601			
		WB	55	145	70	270	47	151	71	269	-8	6	1	-1	0%	WB	59	96	66	E	E	E	82	E			WB	90	149	100	124	255			
		SB	30	886	265	1181	31	868	250	1149	1	-18	-15	-32	-3%	SB	67	18	7	E	B	A	17	B			SB	35	133	120	139	404	36	180	100
		EB	220	100	165	485	216	95	156	467	-4	-5	-9	-18	-4%	EB	63	105	29	E	E	C	60	E			EB	150	159	150	112	246			
Unsignalized	6: Mall Circulation Rd & Southdale SE	NB	395	40	15	450	394	45	13	452	-1	5	-2	2	0%	NB	1	1	1	A	A	A	1	A	3	A	NB				0	41			
		WB	25	115	50	190	24	105	48	177	-1	-10	-2	-13	-7%	WB	10	10	5	B	B	A	9	A			WB				42	108			
		SB	0	0	0	0	0	0	0	0	0	0	0	0	0%	SB	0	0	0	A	A	A	0	A			SB								
		EB	0	25	25	50	0	26	27	53	0	1	2	3	6%	EB	0	9	4	A	A	A	6	A			EB				27	63			
Unsignalized	7: Mall Circulation Rd & Park & Ride	NB	10	0	30	40	9	0	31	40	-1	0	1	0	0%	NB	5	0	2	A	A	A	3	A	2	A	NB	26	64						
		WB	40	300	5	345	39	293	6	338	-1	-7	1	-7	-2%	WB	2	1	0	A	A	A	1	A			WB				1	33			
		SB	0	0	0	0	0	0	0	0	0	0	0	0	0%	SB	0	0	0	A	A	A	0	A			SB								
		EB	0	25	15	40	0	25	15	40	0	0	0	0	0%	EB	0	2	1	A	A	A	2	A			EB								
Signalized	8: Southdale East Exit & York Avenue	NB	100	1116	60	1276	95	1100	57	1252	-5	-16	-3	-24	-2%	NB	108	42	34	E	D	C	47	D	58	E	NB	126	349	300	274	473			
		WB	160	20	150	330	164	22	150	336	4	2	0	6	2%	WB	103	171	22	E	F	C	71	E			WB	98	199	150	163	336	91	190	100
		SB	155	826	125	1106	165	806	123	1093	10	-21	-2	-13	-1%	SB	159	60	64	F	F	F	75	F			SB	184	289	200	405	621			
		EB	165	20	195	380	167	23	202	392	2	3	7	12	3%	EB	52	54	12	D	D	B	32	C			EB				120	139	66	138	
Unsignalized	9: Southdale East Entrance & York Avenue	NB	65	1300	5	1370	64	1265	3	1332	-1	-35	-2	-38	-3%	NB	15	3	3	C	A	A	4	A	7	A	NB	26	86	300					
		WB	0	0	10	10	0	0	10	10	0	0	0	0	0%	WB	0	0	8	A	A	A	8	A			WB						9	31	
		SB	0	1130	105	1244	0	1139	112	1251	0	0	7	7	1%	SB	0	12	8	A	B	A	12	B			SB				73	299	10	143	175
		EB	0	0	0	0	0	0	0	0	0	0	0	0	0%	EB	0	0	0	A	A	A	0	A			EB								
Unsignalized	10: Southdale East Exit & Mall Circulation Rd	NB	0	1	55	56	0	1	56	57	0	0	1	1	2%	NB	0	0	10	A	A	B	10	A	15	C	NB						30	62	
		WB	240	6	0	246	227	7	0	234	-13	1	0	-12	-5%	WB	1	0	0	A	A	A	1	A			WB		3						
		SB	325	105	0	430	333	111	0	444	8	6	0	14	3%	SB	27	8	0	D	A	A	22	C			SB	139	273	250	60	287			
		EB	0	0	0	0	0	0	0	0	0	0	0	0	0%	EB	0	0	0	A	A	A	0	A			EB								
Signalized	11: 66th Street & York Avenue	NB	240	766	345	1351	243	745	336	1324	3	-21	-9	-27	-2%	NB	45	20	3	D	C	A	30	C	33	C	NB	87	170	200	161	441	4	102	
		WB	340	355	30	725	329	359	35	723	-11	4	5	-2	0%	WB	60	35	2	E	D	A	45	D			WB	127	224	300	115	195			
		SB	55	695	85	835	61	704	91	856	6	9	6	21	3%	SB	97	42	15	E	D	B	41	D			SB	55	193	150	250	444	32	125	75
		EB	115	350	180	645	116	355	180	653	3	5	0	8	1%	EB	63	47	3	E	D	A	38	D			EB	44	105	300	136	255			

A-148

SimTraffic Simulation Summary
8/19/2012
2030 SAT BUILD ALT 2
Measures of Effectiveness

Control	Intersection Location	Appr	Forecast Volumes L	T	R	Total	Modeled Volumes L	T	R	Total	Error Volumes L	T	R	Total	Volume Error by Approach %
Signalized	1: 69th Street & France Avenue	NB	95	1410	285	1790	95	1380	283	1758	0	-30	-2	-32	-2%
		WB	170	224	140	534	168	229	148	545	-2	5	8	11	2%
		SB	130	695	55	880	129	695	55	879	-1	0	0	-1	0%
		EB	40	195	170	405	40	203	177	420	0	8	7	15	4%
Unsignalized	2: 69th Street & Southdale SW	NB	35	10	60	105	35	14	54	103	0	4	-6	-2	-2%
		WB	80	250	135	465	77	254	130	461	-3	4	-5	-4	-1%
		SB	63	30	250	343	63	28	255	346	0	-2	5	3	1%
		EB	165	418	35	618	162	424	34	620	-3	6	-1	2	0%
Unsignalized	3: 69th Street & Southdale SE	NB	40	20	40	100	39	21	40	100	-1	1	0	0	0%
		WB	95	380	120	595	94	378	126	598	-1	-2	6	3	1%
		SB	63	6	45	114	64	6	46	116	1	0	1	2	2%
		EB	165	318	50	533	173	304	55	532	8	-14	5	-1	0%
Unsignalized	4: 69th Street & Park & Ride Slip Ramp	NB	0	0	0	0	0	0	0	0	0	0	0	0	0%
		WB	0	580	5	585	0	586	6	592	0	6	1	7	1%
		SB	0	0	10	10	0	0	10	10	0	0	0	0	0%
		EB	0	425	0	425	0	412	0	412	0	-13	0	-13	-3%
Signalized	5: 69th Street & York Avenue	NB	175	985	25	1185	172	977	28	1177	-3	-8	3	-8	-1%
		WB	55	145	70	270	54	152	76	282	-1	7	6	12	4%
		SB	30	886	265	1181	28	876	260	1164	-2	-10	-5	-17	-1%
		EB	220	40	165	425	221	34	159	414	1	-6	-6	-11	-3%
Unsignalized	6: Mall Circulation Rd & Southdale SE	NB	230	61	15	306	237	67	17	321	7	6	2	15	5%
		WB	25	115	50	190	24	124	48	196	-1	9	-2	6	3%
		SB	0	0	0	0	0	0	0	0	0	0	0	0	0%
		EB	0	25	88	113	0	23	91	114	0	-2	3	1	1%
Unsignalized	7: Mall Circulation Rd & Park & Ride	NB	10	0	30	40	10	0	27	37	0	0	-3	-3	-8%
		WB	40	300	5	345	29	306	4	341	-11	6	-1	-4	-1%
		SB	0	0	0	0	0	0	0	0	0	0	0	0	0%
		EB	0	25	15	40	0	25	15	40	0	0	0	0	0%
Signalized	8: Southdale East Exit & York Avenue	NB	100	1116	60	1276	104	1104	54	1262	4	-12	-6	-14	-1%
		WB	160	20	150	330	162	19	158	339	2	-1	8	9	3%
		SB	155	826	125	1106	143	829	126	1098	-12	3	1	-8	-1%
		EB	165	20	195	380	160	20	190	370	-5	0	-5	-10	-3%
Unsignalized	9: Southdale East Entrance & York Avenue	NB	65	1300	5	1370	62	1289	4	1355	-3	-11	-1	-15	-1%
		WB	0	0	10	10	0	0	7	7	0	0	-3	-3	-30%
		SB	0	1139	105	1244	0	1130	108	1238	0	-9	3	-6	0%
		EB	0	0	0	0	0	0	0	0	0	0	0	0	0%
Unsignalized	10: Southdale East Exit & Mall Circulation Rd	NB	0	1	55	56	0	0	53	53	0	-1	-2	-3	-5%
		WB	240	6	0	246	241	5	0	246	1	-1	0	0	0%
		SB	325	105	0	430	315	100	0	415	-10	-5	0	-15	-3%
		EB	0	0	0	0	0	0	0	0	0	0	0	0	0%
Signalized	11: 66th Street & York Avenue	NB	240	766	345	1351	234	772	332	1338	-6	6	-13	-13	-1%
		WB	340	355	30	725	328	349	26	703	-12	-6	-4	-22	-3%
		SB	55	695	85	835	52	696	82	830	-3	1	-3	-5	-1%
		EB	115	350	180	645	112	363	186	663	-3	13	6	16	3%

Appr	Total Delay by Movement (Sec/Veh) L	T	R	Level of Service by Movement L	T	R	LOS by Approach (Sec/Veh) Delay	LOS	LOS by Intersection (Sec/Veh) Delay	LOS
NB	37	36	10	D	D	B	32	C	37	D
WB	38	52	3	D	D	A	34	C		
SB	43	54	17	D	D	B	50	D		
EB	39	50	6	D	D	A	31	C		
NB	2	2	2	A	A	A	2	A	6	A
WB	5	6	5	A	A	A	6	A		
SB	5	4	6	A	A	A	6	A		
EB	6	7	6	A	A	A	7	A		
NB	2	3	2	A	A	A	2	A	7	A
WB	9	10	9	A	B	A	10	A		
SB	2	1	2	A	A	A	2	A		
EB	6	7	6	A	A	A	7	A		
NB	0	0	0	A	A	A	0	A	5	A
WB	0	5	2	A	A	A	5	A		
SB	0	0	16	A	A	C	16	C		
EB	0	4	0	A	A	A	4	A		
NB	60	22	13	E	C	B	32	C	34	C
WB	52	97	66	D	F	E	80	E		
SB	67	18	7	E	B	A	17	B		
EB	82	180	21	E	E	C	56	E		
NB	1	1	1	A	A	A	1	A	3	A
WB	7	8	4	A	A	A	7	A		
SB	0	0	0	A	A	A	0	A		
EB	0	8	3	A	A	A	4	A		
NB	3	0	2	A	A	A	2	A	2	A
WB	2	1	0	A	A	A	1	A		
SB	0	0	0	A	A	A	0	A		
EB	0	2	1	A	A	A	2	A		
NB	101	44	32	E	D	C	48	D	55	E
WB	83	117	15	E	E	B	53	D		
SB	131	62	67	F	F	F	72	E		
EB	54	45	10	D	D	B	31	C		
NB	12	4	3	B	A	A	4	A	6	A
WB	0	0	5	A	A	A	5	A		
SB	0	6	6	A	A	A	8	A		
EB	0	0	0	A	A	A	0	A		
NB	0	0	8	A	A	A	8	A	11	B
WB	1	0	0	A	A	A	1	A		
SB	20	6	0	C	A	A	17	C		
EB	0	0	0	A	A	A	0	A		
NB	46	20	3	D	C	A	20	C	33	C
WB	58	35	2	E	D	A	45	D		
SB	65	41	15	E	D	B	40	D		
EB	64	46	3	E	D	A	37	D		

Appr	Average & Maximum Traffic Queueing (feet) Left-Turn Ave Queue	Max Queue	Storage	Through Ave Queue	Max Queue	Right-Turn Ave Queue	Max Queue	Storage
NB	62	242	250	252	578	62	279	220
WB	107	230	250	96	171	30	150	100
SB	95	249	200	178	389	22	150	100
EB	36	124	150	83	188			
NB				23	66			
WB				42	136			
SB				19	65	16	63	100
EB				60	154			
NB				22	65			
WB				103	166			
SB				20	58			
EB				50	184			
NB								
WB				36	127			
SB						6	29	
EB				30	174			
NB	100	160	100	287	549			
WB	47	125	100	131	266			
SB	32	88	120	130	275	25	149	100
EB	150	194	150	91	242			
NB				7	48			
WB				47	103			
SB								
EB				36	63			
NB	24	55						
WB				3	48			
SB								
EB								
NB	126	288	300	288	458			
WB	80	175	150	129	263	65	150	100
SB	160	280	200	419	624			
EB				117	139	60	133	
NB	20	68	300					
WB						5	31	
SB				52	408	3	50	175
EB								
NB						28	65	
WB	1	23						
SB	116	258	250	44	181			
EB								
NB	63	174	200	157	358	1	25	
WB	125	228	300	108	197			
SB	46	194	150	241	427	40	125	75
EB	41	99	300	133	256			

A149

RESOLUTION NO. 2000-123

City of Edina

APPROVING FINAL DEVELOPMENT PLAN
FOR CONCORDIA PROPERTIES LLC,
SOUTHDALE SHOPPING CENTER
THEATER AND RESTAURANT/RETAIL EXPANSION

BE IT RESOLVED by the City Council of the City of Edina, Minnesota, that the Final Development plan dated October 18, 2000, for Concordia Properties, LLC, Southdale Shopping Center Theater and Restaurant/Retail Expansion presented at the regular meeting of the City Council on November 21, 2000, be and is hereby approved.

Passed and adopted by the Edina City Council this 21st day of November 2000.

ATTEST: Debra A Mangen
City Clerk

Kenneth J Maetzold
Mayor

STATE OF MINNESOTA)
COUNTY OF HENNEPIN)SS
CITY OF EDINA)

CERTIFICATE OF CITY CLERK

I, the undersigned duly appointed and acting City Clerk for the City of Edina do hereby certify that the attached and foregoing Resolution was duly adopted by the Edina City Council at its Regular Meeting of November 21, 2000, and as recorded in the Minutes of said Regular Meeting.

WITNESS my hand and seal of said City this 21st day of December, 2000.

Debra A Mangen
City Clerk

$500.00 application fee

A150

City Hall
4801 WEST 50TH STREET
EDINA, MINNESOTA 55424-1394

(952) 927-8861
FAX (952) 826-0390
TDD (952) 826-0379

Conference and Section Championship. **Motion made by Member Hovland and seconded by Member Kelly introducing the following resolution and moving its approval:**

RESOLUTION NO. 2000-118
RESOLUTION OF COMMENDATION
EDINA HIGH SCHOOL
2000 BOYS' SOCCER TEAM

WHEREAS, the members of the Edina High School 2000 Boys' Soccer Team were Champions of the Classic Lake Conference, Section Champions and State Champions; and

WHEREAS, success has come to the members of the Team because of their extraordinary ability, hours of practice and the leadership of their coaches; and

WHEREAS, as representatives of the City of Edina, the members of the Team exemplified the highest standards of athletic proficiency and good sportsmanship.

NOW, THEREFORE, BE IT RESOLVED by the Edina City Council that congratulations be extended to the members of the Team:

Sam Awsumb	**Andy Witchger**	**Benjamin Dalton**
Jonathan Lewis	**Patrick Cronan**	**Nicolas Horns**
Erik Nichols	**Alexander Darbut**	**Pete Jorgensen**
Terence O'Connell	**Robert Guelich**	**Erik Lund**
Daniel Roddy	**Philip Johnson**	**Anthony Ruben**
Jeffrey Shideman	**Perek Lundquist**	**Aaron Witchger**
Jeffrey Strickland	**Eric Snover**	**David Jenson, Coach**
Tommy Weber	**Chris York**	**Bill Garner, Asst. Coach**

BE IT FURTHER RESOLVED that this resolution be recorded in the Minutes of the Edina City Council and that copies be given to members of the Team.

ADOPTED this 21st day of November, 2000.

Ayes: Hovland, Kelly, Maetzold
Resolution adopted.

*MINUTES OF THE REGULAR MEETINGS OF NOVEMBER 6, 2000, APPROVED **Motion made by Member Hovland and seconded by Member Kelly approving the Minutes of the Regular Meeting of November 6, 2000, approved.**

Motion carried on rollcall vote - three ayes.

FINAL DEVELOPMENT PLAN FOR CONCORDIA PROPERTIES, L.L.C. APPROVED, (SOUTHDALE SHOPPING CENTER) Affidavits of Notice were presented, approved and ordered placed on file.

Presentation by Planner

Planner Larsen explained the owners of Southdale have submitted a request for Final Development Plan approval to allow the construction of an addition to the center containing a floor area of 120,007 square feet. The addition would house a 16-screen theater and two new restaurants. The theater would have a seating capacity of 3,959. The proposed addition would increase the total floor area of the center from 1,248,517 to 1,368,524 square feet. The additions would be located adjacent to the southwest corner of the center in an area now used for parking and for transit operations. The additions would result in a reduction of the total on-site parking from the current 7,104 spaces to 6,686 spaces.

A151

Scott Pollack, Aerostreet, project architect, gave a presentation using graphics of the proposed expansion. Mr. Pollack noted the expansion is proposed for the southwest corner of the site with the theater being placed between the existing truck tunnel and the existing parking deck. The ring road will be moved further out to maximize the parking inside of the ring road that would be more comfortable to the customers. Mr. Pollack explained there are two parking fields' one east and one west of the expansion, both at different levels. From the lower parking field, there will be two entrances, the lobby entrance into the movie theater. He added patrons would be able to purchase tickets inside the theater. Next to this would be a separate entrance replacing the existing mall entrance. This entrance would allow customers to pass through the theater and into the mall. Mr. Pollack explained that the two restaurants with outside entries would have their own identities on the outside of the mall.

Mr. Pollack explained that there is an underutilized common area of approximately 20,000 feet that will be converted into tenant space with the improvement. He said that there is a synergy existing between theaters and restaurants so placing them in close proximity is important. On the restaurant side of the addition, there would be entrances into the restaurants, individual retail tenants, and two mall entrances one with an escalator down to the theater.

Mayor Maetzold asked how people get from the main core of the shopping center to the bus terminal. Mr. Pollack said from the lower level, people would walk through an arcade and out through the movie theater. From the upper level, they would walk along the length of the theater to the bus shelter.

Member Hovland asked if it was correct that in order to reach the bus shelter persons would walk outside, and if this would be different from the present situation, where they walk out directly from the mall to a covered bus shelter. Mr. Pollack acknowledged that there is a longer distance than exists today. Member Hovland asked if there was any plan to allow access to the bus shelter through the back area of the theater or on the west side. Mr. Pollack explained that was actually the truck tunnel and would be unsafe. Member Hovland asked how far a person would have to walk to reach the shelter. Mr. Pollack replied approximately 250 feet.

Member Kelly asked to address the developer. Richard Taylor, the O'Connor Group, one of the general partners who own the property said he serves as the asset manager responsible for Southdale. Member Kelly said it appears the proposal is almost as if an outlot was proposed for development. While he would be willing to give up the 700 parking spaces, he needs to be convinced that it will increase traffic flow in the center and allow areas of Southdale that have been under-performing (Mervyns to Penneys and Penneys to Daytons) to grow their traffic. He warned that he could not support any further reductions in parking in the future after this addition. He asked how the proposed addition would increase the traffic to the Mervyns' and Pennies' corridors. Mr. Taylor responded that looking at sales per square foot, Southdale is in the top ten of the national regional malls. Penney's Court has 59,000 square feet that is about 50% occupied under permanent leases. Mervyns' Court on the lower level has about 30,000 square feet, which is about 40% occupied. As the owner analyzed the issues of the property, they looked at these two underutilized areas plus the third level food court, which had not performed as hoped. The owners attempted to find a theater operator who would put a two or three level theater into the Penneys' Court and were unsuccessful. Theater owners said their operations need to be a single level entity and the proposed location is the only one available. He added

Public Comment

David Farmer, 4612 Casco Avenue, asked if there had been any consideration of moving the mass transit location to an entirely different area from either its existing or proposed locations.

Council Discussion/Action

Member Kelly said he has spoken with many of the development team. He stated that his major concern is that the expansion is being sought to increase the mall's market value allowing Southdale to be flipped without looking to the long-term needs of the area. Member Kelly said he originally thought the expansion would be located nearer to J. C. Penney's and that the restaurants would be decentralized. He added that in his opinion, the development of virtually an outlot does nothing to improve traffic. Member Kelly stated further that the expansion solves a secondary problem at the cost of 700 parking spaces. He stated that future development cannot come at the cost of more parking. Member Kelly asked this be made a condition of approval for the current proposal.

Member Hovland said he did not share all the concerns of Member Kelly. He acknowledged that having a theater anchoring a mall was a new concept, adding that he understood the synergy existing between theaters and restaurants. Member Hovland recognized the hard work of the development team, thanking them for the presentation. Member Hovland said he was all right with the reduction in the parking, but was very concerned about affecting mass transit. He requested that the development approval be conditioned upon further design and approval of the transit hub and access to the bus shelter. Mass transit and bus ridership should be encouraged.

Mayor Maetzold noted that he wished the changes were completed on France Avenue. However, he stated he liked the theater concept. Mayor Maetzold voiced concern about the east side of the property. He added he thought the developers had done a good job with traffic flow and parking, however, he shares Member Hovland's concern for the transit hub and does not want to see any negative impact on bus ridership. Mayor Maetzold does not want to see bus riders walking 280 feet outside to get to a bus shelter agreeing that a condition of approval should be further review of the mass transit portion of the project.

Member Kelly questioned how many liquor licenses are still available in Edina. Mr. Hughes replied that eleven licenses are still available. Member Kelly expressed concern that the restaurants developed be of a caliber that would improve the mall. Gary Colliard responded that while his firm is the theater developer, it is also a mixed-use land developer. They will be in the center for twenty years and have a fiduciary responsibility to make sure any restaurants are a good fit and that everyone's goal was to improve the traffic and viability of the Southdale Center.

Member Hovland made a motion to close the public hearing. Member Kelly seconded the motion.

Ayes: Hovland, Kelly, Maetzold
Motion carried

Member Kelly made a motion adopting Resolution No. 2000-123 granting final development plan approval conditioned upon: 1) location and design of transit hub must be approved by City Staff; 2) an easement allowing City transit vehicles the right to cross Center property; 3) a

Cary Teague

From: Tom Jenson
Sent: Thursday, August 30, 2012 4:01 PM
To: Cary Teague
Subject: Southdale Apartments

Hi Cary,

Here are my comments for the Southdale Apartments.

1. They are showing only one water supply to the property. More explanation is needed on how the fire sprinkler protection is going to work for 3 buildings and the parking levels.
2. I'm recommending separate water supplies coming from the new water main installed on the property to each building. The water supply for the 4 story apartment/townhouse should also supply the underground parking.
3. I'm recommending fire department connections (FDC) for each building.
    a. 10 story building located at the south end.
    b. 6 story building located at the south east corner.
    c. 4 story and parking garage located at the west exterior entrance to the stairway.
4. Fire hydrants shall be located on the inside of the road around the buildings so connecting to them does not obstruct fire department vehicles.
    a. One shall be located near the southeast corner of the 6 story building.
    b. One shall be located at the west exterior entrance to the stairway of the 4 story building.
    c. The one shown on C4.1 on the north end of the property can remain as shown.
5. Fire lane signs will be required along the access road to the buildings.

I will put a copy of this with my plan set with notes on it.

Thanks,

Thomas Jenson, Fire Marshal
952-826-0337 | Fax 952-826-0393
TJenson@EdinaMN.gov | www.EdinaMN.gov/Fire

A154

CITY OF EDINA

MEMO

Engineering Department • Phone 952-826-0371
Fax 952-826-0392 • www.CityofEdina.com

Date: September 7, 2012

To: Cary Teague – Community Development Director

From: Wayne D. Houle – Director of Engineering

Re: Review of Planning Submittal for Southdale Housing

Engineering has reviewed the plans for the above stated project and offer the following comments:

- A Nine Mile Creek Watershed permit will be required, along with other agency permits such as Hennepin County Public Works, MNDH, MPCA, MCES.
- It appears that all storm water is treated on-site; provide all storm water calculations that indicate this.
- A developer's agreement will be required for the revisions to 69th Street West – pedestrian crossing at easterly entrance and the westerly entrance into Southdale to include an eastbound left turn lane. Other items that need to be included are the public sidewalks along York Avenue and also along 69th Street West, and the intersection improvements at York Avenue and the entrance into Cub Foods.
- All improvements along West 69th Street will need to meet Municipal State Aid standards and along York Avenue will need to meet County State Aid standards.
- Provide sidewalk easement over all public sidewalks along York Avenue and 69th Street West.
- Provide better pedestrian walkway between project and Southdale Center.

Sheet C2.1 Site Plan:

- Provide plans for the westerly entrance on 69th Street West into Southdale Center to include an eastbound left turn bay.
- Provide plans for an enhanced pedestrian crossing through the median island between the easterly entrance of Southdale Center and Galleria to the south. The Promenade Crossing at Hazelton Road should be the template for the design of this pedestrian crossing.
- Provide a "No U-Turn" sign in the westbound 69th Street West left turn bay at the Galleria entrance. This will prevent vehicles from exiting the right-out exit at the apartments and weaving across two through lanes to then go east bound on 69th Street West; the route to go eastbound would be to use the internal roadway system of Southdale Center to access York Avenue.
- Provide an updated intersection detail for the intersection improvements at York Avenue and the entrance into Southdale / Cub Foods. The intersection improvements should include enhanced pedestrian crossings similar to what is being proposed on France Avenue at 66th Street West, 70th Street West, or 76th Street West.

- Eliminate boardwalk on sidewalk along York Avenue. The sidewalks along York Avenue and 69th Street West will become public sidewalks where the City will be maintaining these sidewalks. Provide 8-ft wide sidewalks with a minimum of 8-ft wide boulevards in these locations.
- The attached turning radius indicates that an ambulance can maneuver through the turn-around.

Sheet C4.1Utility Plan:

- Staff has analyzed both public utility systems to be certain that this development will not burden the public system. Short Elliot Hendrickson (SEH) reviewed the existing water main system. SEH determined through the water main computer model that the existing water main has capacity to provide water service, irrigation, and fire flow protection to the 232 units while still maintaining the same level of protection to the City. Barr Engineering (BARR) reviewed the existing sanitary sewer system. The additional sanitary flow generated from the proposed 232 unit development was incorporated into the sanitary sewer model. BARR determined that there is sufficient capacity in the existing sanitary sewer lines to accommodate the proposed development.
- There is a note below the Utility Notes that states the developer is analyzing a "Living Machine Sanitary Sewer System" in lieu of connecting into the sanitary sewer system. Staff does not recommend that this system be approved until staff can be reassured that the Metropolitan Council of Environmental Services along with the Minnesota Department of Health and the Minnesota Pollution Control Agency approve such treatment.
- Indicate on plan that all utilities shown are "Private".

Staff will require a more detail review of the Civil Plans if this project is approved by the City Council. Please contact me if you have any questions regarding this first review.

G:\PW\ADMIN\COMM\EXTERNAL\GENERAL CORR BY STREETS\S Streets\Southdale Center\2012 Apartments\20120906 WH-Edina Review Southdale Housing.doc

A156

A157

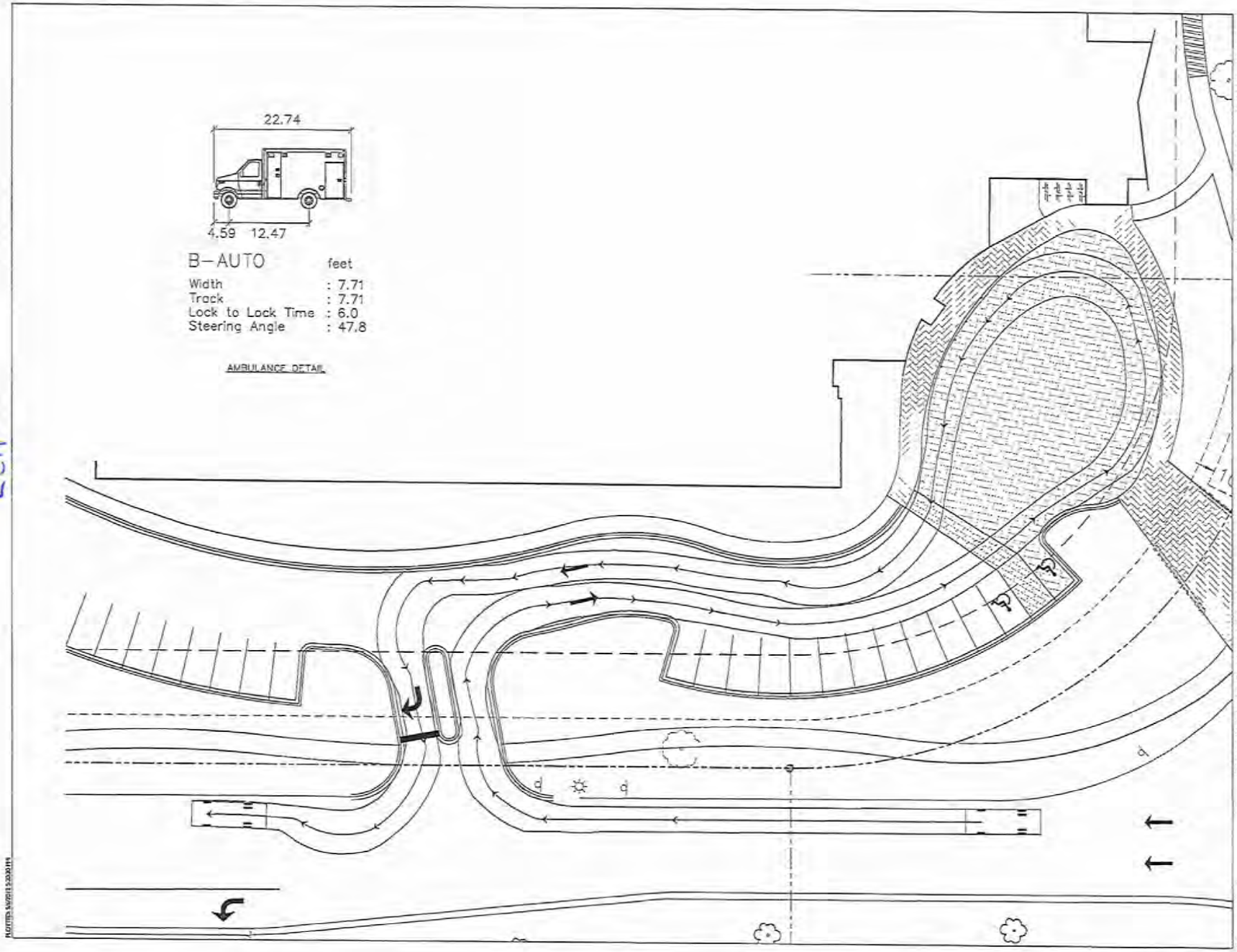

BKV GROUP

Architecture
Interior Design
Landscape Architecture
Engineering

Boarman
Kroos
Vogel
Group
Inc.

222 North Second Street
Minneapolis MN 55401
Telephone: 612-339-3752
Facsimile: 612-339-6212
www.bkvgroup.com

Kimley-Horn and Associates, Inc.

Southdale Housing

NORTH

GRAPHIC SCALE IN FEET

CERTIFICATION

I hereby certify that this plan, specification, or report was prepared by me or under my direct supervision and that I am a duly Licensed Professional Engineer under the laws of the State of Minnesota.

Thomas J. Lincoln — Date

21433

License Number

REVISIONS	No.	DATE

DATE	9/6/2012
DRAWN BY	ML
CHECKED BY	TL
COMMISSION NO.	[illegible]

VEHICLE MANEUVERS

AMBULANCE

I

© 2011 BKV Group, Inc. EOE

Twin Cities Metropolitan Area

Southdale - Proposed Transit Traffic Circulation - 2012

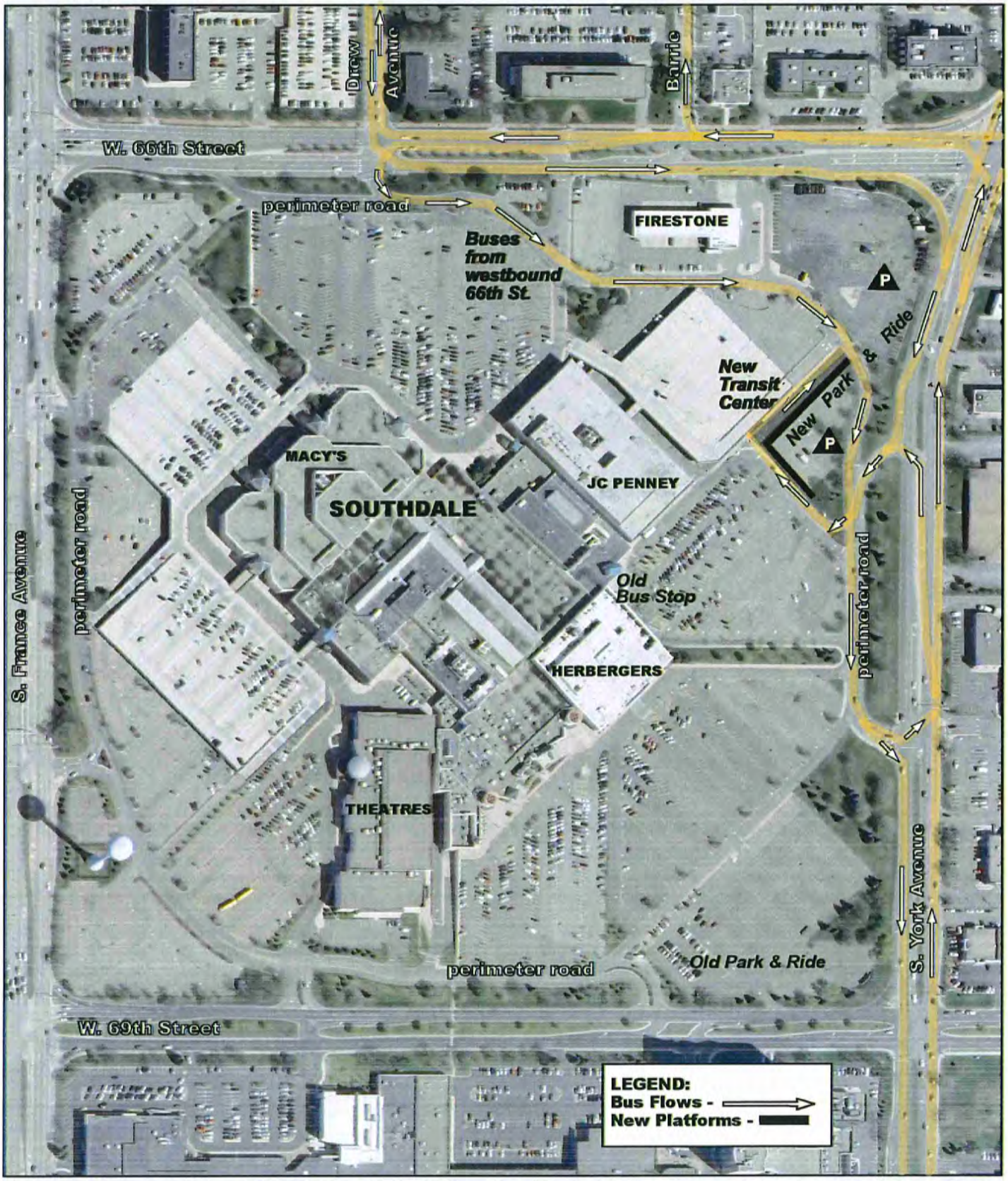

0 125 250 500 Feet

Map By J. Dillery
Metro Transit Service Development 6/29/12

Metropolitan Council

Metro Transit

A158

DRAFT PLAN

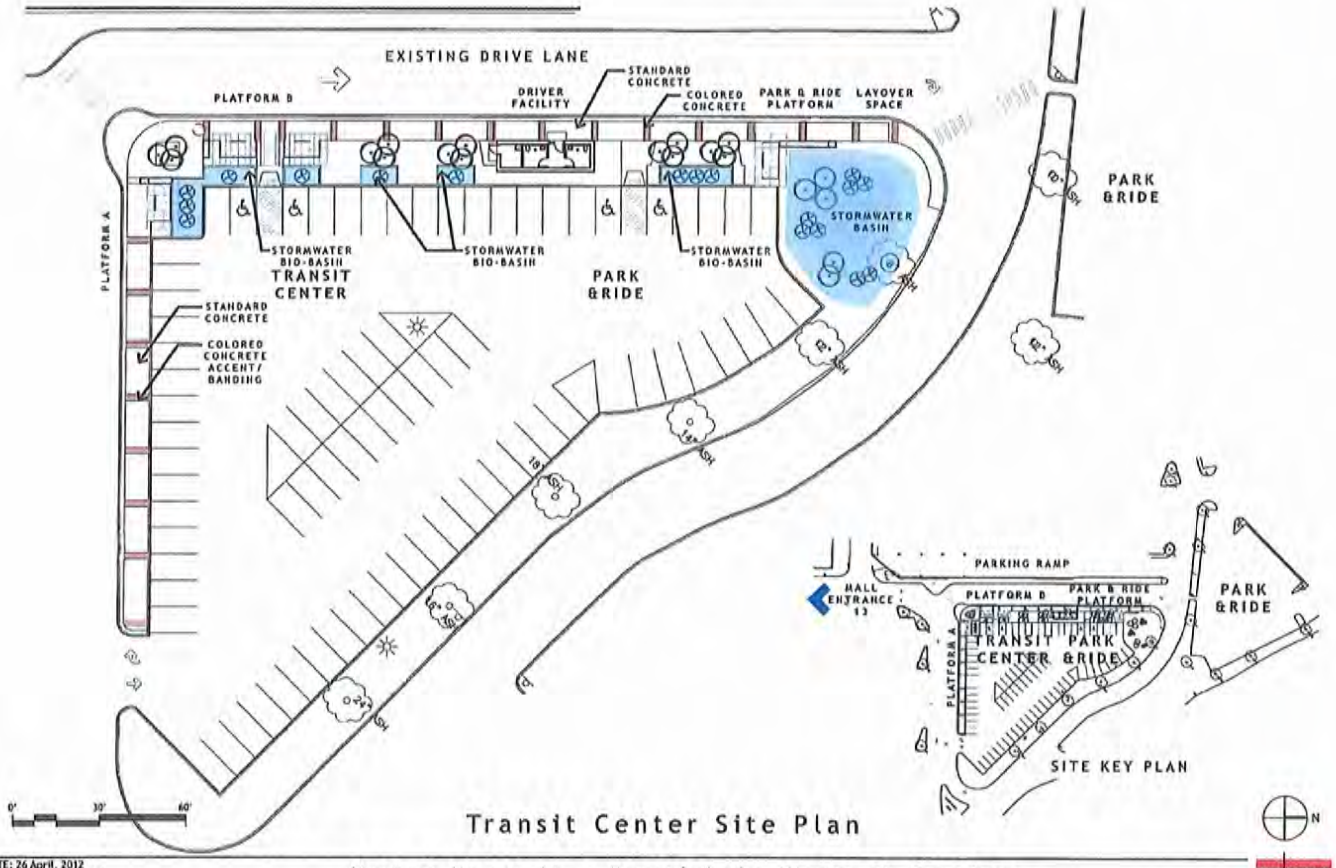

Transit Center Site Plan

DATE: 26 April, 2012
PROJECT NO.: 10013.005

Metro Transit - Southdale Transit Center
Edina, Minnesota

SK. 5

HAY DOBBS

Transit Center Illustrative Perspective

DATE: 26 April, 2012
PROJECT NO.: 10013.005

Metro Transit - Southdale Transit Center
Edina, Minnesota

SK. 6

HAY|DOBBS

DRAFT PLAN

A 160

Transit Center Illustrative Perspective

VIEW LOOKING SOUTHWEST

DRAFT PLAN

DATE: 22 November, 2011
PROJECT NO.: 10013.005

Metro Transit - Southdale Transit Center

Edina, Minnesota

SK. 7

HAY DOBBS

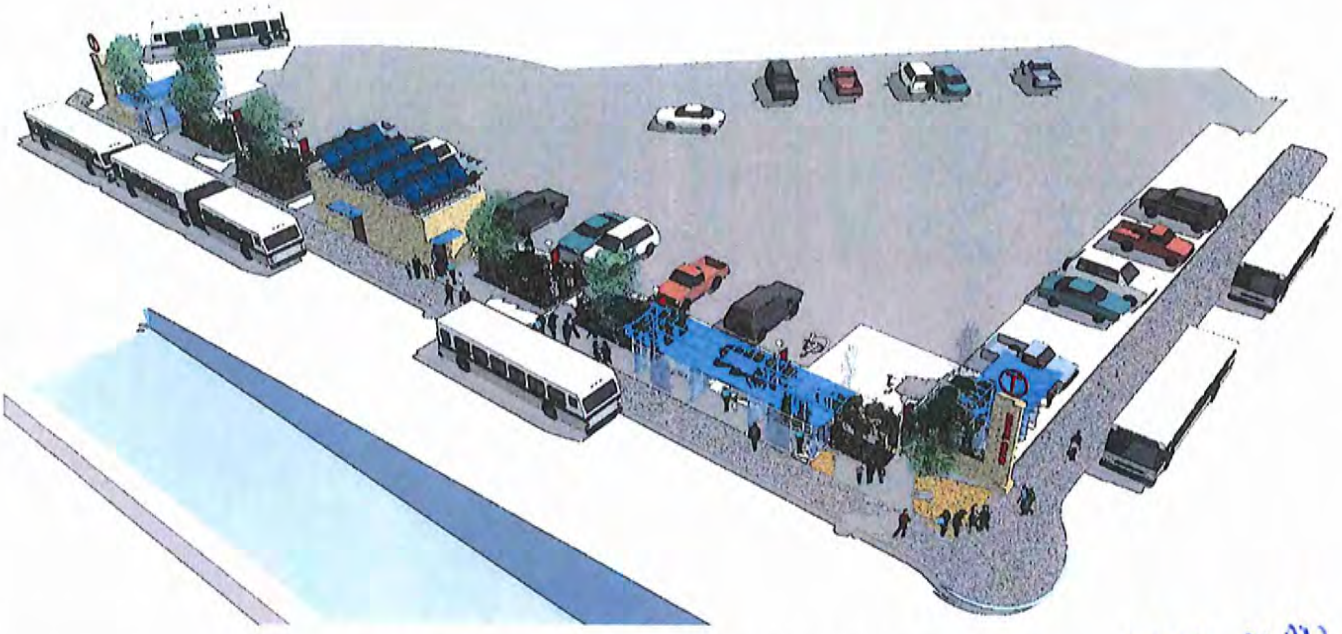

Transit Center Illustrative Perspective

VIEW LOOKING NORTHEAST

DRAFT PLAN

DATE: 22 November, 2011
PROJECT NO.: 10013.005

Metro Transit - Southdale Transit Center
Edina, Minnesota

SK. 8

HAY|DOBBS

Transit Center West Elevation

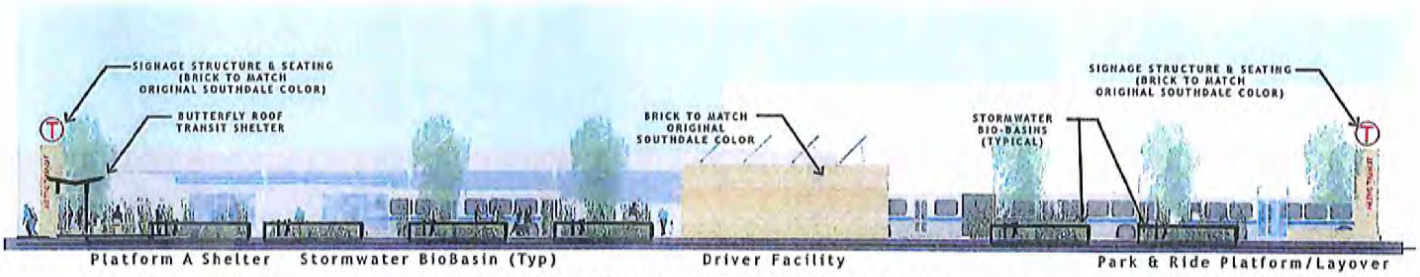

Transit Center East Elevation

DATE: 22 November, 2011
PROJECT NO.: 10013.005

Metro Transit - Southdale Transit Center
Edina, Minnesota

SK. 9

HAY|DOBBS

DRAFT PLAN